Advanced Aerospace Control: Absolute Stability

Marco Lovera
Dipartimento di Scienze e Tecnologie Aerospaziali
Politecnico di Milano
marco.lovera@polimi.it

Introduction

In many problems of practical interest feedback systems can be modelled as

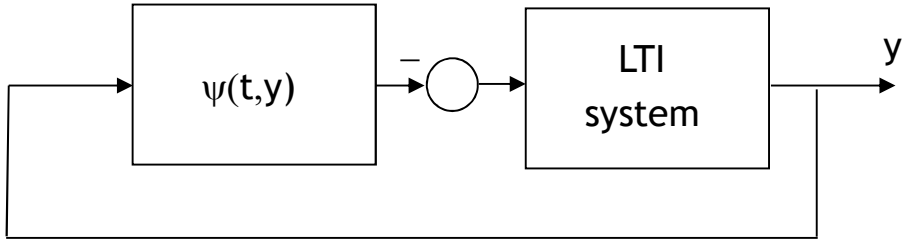

A frequent problem is to study the effect of inserting a nonlinearity in an otherwise known linear feedback system.

Absolute stability

Problem statement

Consider the feedback system given by

$$\dot{x} = Ax + Bu$$
$$y = Cx$$
$$u = -\psi(t, y)$$

where u,y $\in \mathbb{R}$ and $\psi(\cdot,\cdot)$ satisfy a condition like (sector-bounded nonlinearity)

$$\alpha y^2 \leq y\psi(t, y) \leq \beta y^2, \quad \forall t \geq 0, \forall y \in [a, b]$$

where α, β, a, b ($\beta > \alpha$, $a < 0 < b$) are constant.

Aim: study stability of the equilibrium at x=0.

Sector-bounded nonlinearities

Example of a sector-bounded nonlinearity:

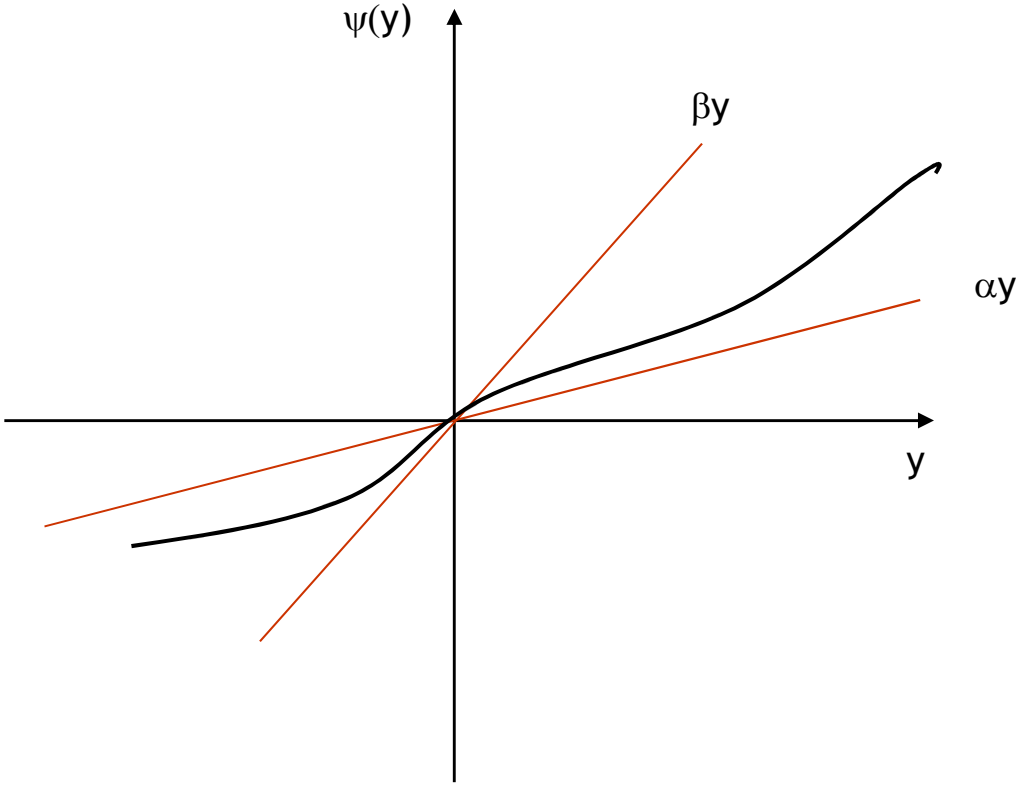

Absolute stability

- The feedback system is called absolutely stable if x=0 is globally (uniformly) asymptotically stable for all $\psi(\cdot, \cdot)$ in the assigned sector.

- Stability analysis using Lyapunov methods allows to relate absolute stability to properties of the linear loop trasfer function.

PR and SPR transfer functions

Consider a LTI system described by the transfer function:

$$G(s) = \frac{b_m s^m + b_{m-1} s^{m-1} + \ldots + b_0}{s^n + a_{n-1} s^{n-1} + \ldots + a_0}, \qquad m \leq n$$

G(s) is

- Positive real (PR) if:
  - G(s) is real for all real s;
  - Re[G(s)] $\geq$ 0 for all s: Re[s] > 0;

- Strictly positive real (SPR) if:
  there exists ε>0 such that G(s-ε) is PR.

PR and SPR transfer functions

- Geometrically the PR condition means that function G(s) maps the closed right-half plane to itself;

- Origin of the definition: circuit theory.

  It can be proved that passive electrical networks (resistors+inductors+capacitors) always have PR transfer functions.

- In general:
  - Linear systems that do not generate energy are PR;
  - Dissipative linear systems are SPR.

A condition for PR

Theorem:

A transfer function G(s) is PR if and only if:

- G(s) is real for all real s;
- G(s) is stable;
- Poles of G(s) with null real part are either distinct or have real and non-negative residuals.;
- $\mathrm{Re}[G(j\omega)] \geq 0 \quad \forall\, \omega$ such that $j\omega$ is not a pole of G(s).

Note: PR and Nyquist plots

- If G(s) is PR, then the Nyquist plot of $G(j\omega)$ is in the closed right-half plane.

- This implies that if G(s) has relative degree > 1 then it is not PR (the Nyquist plot violates the previous condition).

- Therefore the relative degree of a PR G(s) is 0 or 1.

A sufficient SPR condition

Theorem:

A transfer function G(s) is SPR if:

- G(s) is asymptotically stable;
- Re[G(j ω)] > δ $\forall\ \omega, \delta > 0$;

Main difference between PR and SPR: in the PR case poles on the imaginary axis are «allowed»; a SPR G(s) must be asymptotically stable.

A SPR condition (grel=0)

Theorem:

A transfer function G(s) with relative degree 0 is SPR if and only if:

- G(s) is asymptotically stable;
- $\mathrm{Re}[G(j\omega)] > 0 \quad \forall\, \omega.$

A SPR condition (grel=1)

Theorem:

A transfer function G(s) with relative degree 1 is SPR if and only if:

- G(s) is asymptotically stable;
- Re[G(jω)] > 0 $\forall\ \omega$;
- $\lim_{\omega^2 \to \infty} \omega^2 Re[G(j\omega)] > 0$

Examples

- G(s)=1/s is PR:

$$Re[G(s)] = Re[G(\sigma + j\omega)] = \frac{\sigma}{\sigma^2 + \omega^2}$$

- G(s)=1/s however is not SPR, as

$$G(s - \epsilon) = \frac{1}{s - \epsilon}$$

has a pole with positive real part for all $\varepsilon > 0$.

Examples

- G(s)=1/(s+a), a>0, is PR

$$Re[G(s)] = Re[G(\sigma + j\omega)] = \frac{\sigma + a}{(\sigma + a)^2 + \omega^2}$$

- G(s)=1/(s+a) is also SPR, as

$$G(s - \epsilon) = \frac{1}{s - \epsilon + a}$$

has a pole with negative real part for all $\varepsilon < a$.

- $$\lim_{\omega^2 \to \infty} \omega^2 Re[G(j\omega)] = \lim_{\omega^2 \to \infty} \omega^2 \frac{a}{a^2 + \omega^2} > 0$$

The Kalman-Yakubovich-Popov Lemma

Lemma: the controllabile and observable LTI system

$$\dot{x} = Ax + Bu$$
$$y = Cx + Du$$

with asymptotically stable A, and transfer function

$$G(s) = C(sI - A)^{-1}B + D$$

is SPR if and only if there exist matrices $P=P^T>0$, W and L and a constant $\varepsilon > 0$ such that

$$A^T P + PA = -L^T L - \epsilon P$$
$$PB = C^T - L^T W$$
$$W^T W = D + D^T$$

The Kalman-Yakubovich-Popov Lemma (2)

When D=0 the Lemma becomes simpler:

Lemma: the controllabile and observable LTI system

$$\dot{x} = Ax + Bu$$
$$y = Cx$$

with asymptotically stable A, and transfer function

$$G(s) = C(sI - A)^{-1}B$$

is SPR if and only if there exist matrices $P=P^T>0$ and L such that

$$A^T P + PA = -L^T L$$
$$PB = C^T$$

The Kalman-Yakubovich-Popov Lemma (3)

- This Lemma characterises the SPR property in state space form;
- It is useful to construct Lyapunov functions to study absolute stability;
- It can be generalised
  - to the PR condition;
  - to the study of MIMO systems.

Absolute stability analysis

- The KYP Lemma allows to relate absolute stability and the PR, SPR properties.

- The frequency-domain interpretation of SPR allows to work out a sufficient condition for absolute stability, based on the Nyquist criterion, known as the *circle* criterion.

- We start from a particular case with asymptotically stable A and α=0.

Sufficient condition for absolute stability (A a.s. and α=0)

The system

$$\begin{aligned} \dot{x} &= Ax + Bu \\ y &= Cx \\ u &= -\psi(t,y) \end{aligned} \qquad \Rightarrow \qquad \begin{aligned} \dot{x} &= Ax - B\psi(t,y) \\ y &= Cx \end{aligned}$$

with A asymptotically stable, (A,B) controllable, (A,C) observable, and ψ(t,y) sector-bounded with α=0, is absolutely stable if

$$Z(s) = 1 + \beta G(s)$$

is SPR, where

$$G(s) = C(sI - A)^{-1}B$$

Proof

- The sector-bound condition (α=0) can be written as

$$\psi(t,y)[\psi(t,y)-\beta y] \leq 0, \quad \forall t \geq 0, \forall y$$

- Indeed for α=0 the sector condition reduces to

$$0 \leq y\psi(t,y) \leq \beta y^2, \quad \forall t \geq 0, \forall y$$

and dividing by y we have

$$\begin{array}{l} 0 \leq \psi(t,y) \\ \psi(t,y) \leq \beta y, \quad \forall t \geq 0, \forall y > 0 \end{array} \Rightarrow \begin{array}{l} 0 \leq \psi(t,y) \\ \psi(t,y) - \beta y \leq 0, \quad \forall t \geq 0, \forall y > 0 \end{array}$$

for positive y and

$$\begin{array}{l} 0 \geq \psi(t,y) \\ \psi(t,y) \geq \beta y, \quad \forall t \geq 0, \forall y < 0 \end{array} \Rightarrow \begin{array}{l} 0 \geq \psi(t,y) \\ \psi(t,y) - \beta y \geq 0, \quad \forall t \geq 0, \forall y < 0 \end{array}$$

for negative y.

Combining the two pairs of inequalities one gets

$$\psi(t,y)[\psi(t,y)-\beta y] \leq 0, \quad \forall t \geq 0, \forall y$$

Proof

- Consider now the Lyapunov function candidate

$$V(x) = x^T P x, \quad P = P^T > 0$$

- The derivative along the trajectories is given by

$$\begin{aligned}
&\dot{V}(x) = x^T(PA + A^T P)x - 2x^T PB\psi(t,y) \leq \\
&\leq x^T(PA + A^T P)x - 2x^T PB\psi(t,y) - 2\psi(t,y)[\psi(t,y) - \beta y] = \\
&= x^T(PA + A^T P)x - 2x^T[C^T\beta - PB]\psi(t,y) - 2\psi(t,y)^2
\end{aligned}$$

Proof

- Applying the Lemma KYP to Z(s), which has state space form [A, B, βC, 1] (grel=0), we have

$$A^T P + PA = -L^T L - \epsilon P$$
$$PB = \beta C^T - \sqrt{2} L^T$$

- Substituting in the expression for the derivative we get

$$\begin{aligned}\dot{V}(x) &\leq x^T(PA + A^T P)x - 2x^T[C^T\beta - PB]\psi(t,y) - 2\psi(t,y)^2 \\ &= -\epsilon x^T P x - x^T L^T L x + 2\sqrt{2} x^T L^T \psi(t,y) - 2\psi(t,y)^2\end{aligned}$$

- The last three terms form a quadratic form

$$\dot{V}(x) \leq -\epsilon x^T P x - [Lx - \sqrt{2}\psi(t,y)]^T [Lx - \sqrt{2}\psi(t,y)] \leq -\epsilon x^T P x < 0$$

General case

The α=0 requirement on the nonlinearity can be removed:

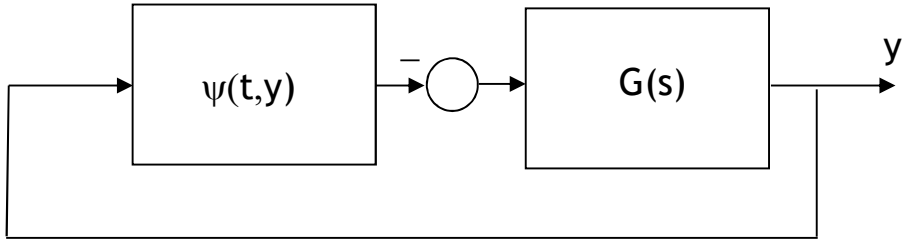

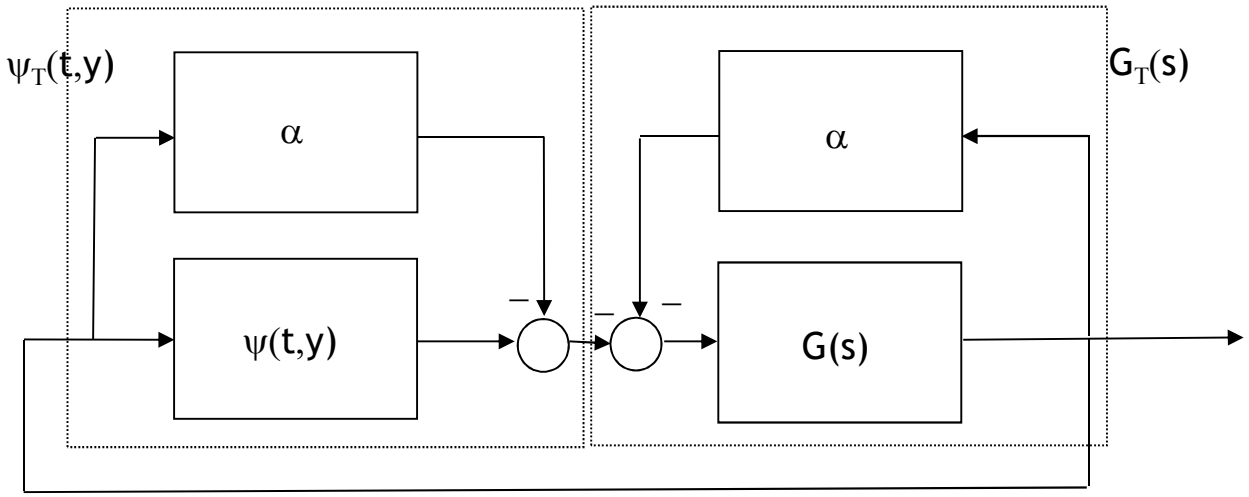

General case

where

$$\psi_T(t,y) = [\psi(t,y) - \alpha y]$$

$$G_T(s) = \frac{G(s)}{1+\alpha G(s)}$$

and ψ_T is now sector-bounded with α=0.

The upper bound of the sector for ψ_T is of course β-α.

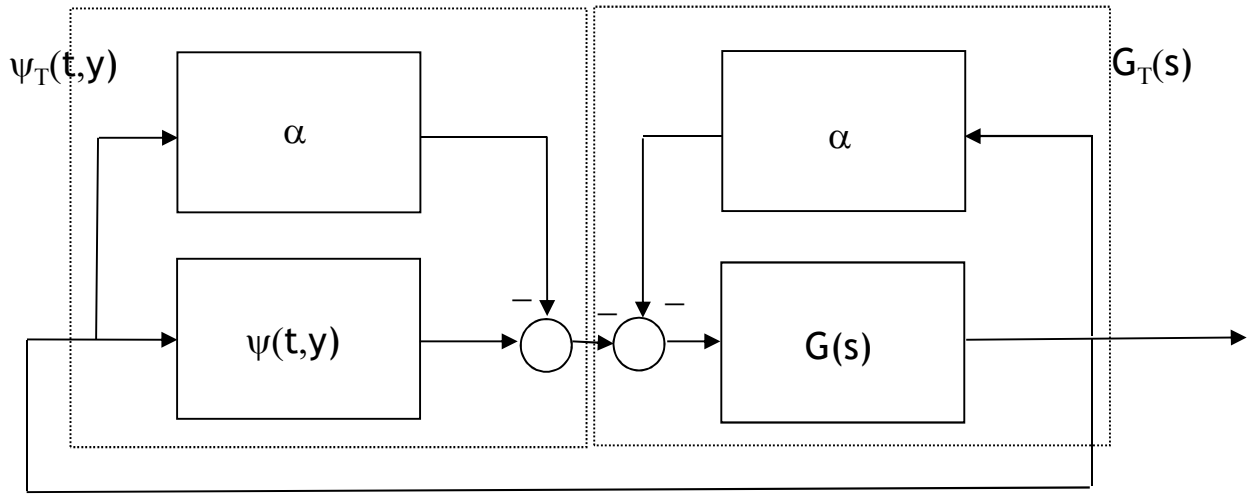

General case

Assuming that $G_T(s)$ is a.s. we can conclude that the feedback system is asymptotically stable if the transfer function

$$Z_T(s) = 1 + (\beta - \alpha)G_T(s) = \frac{1 + \beta G(s)}{1 + \alpha G(s)}$$

is SPR.

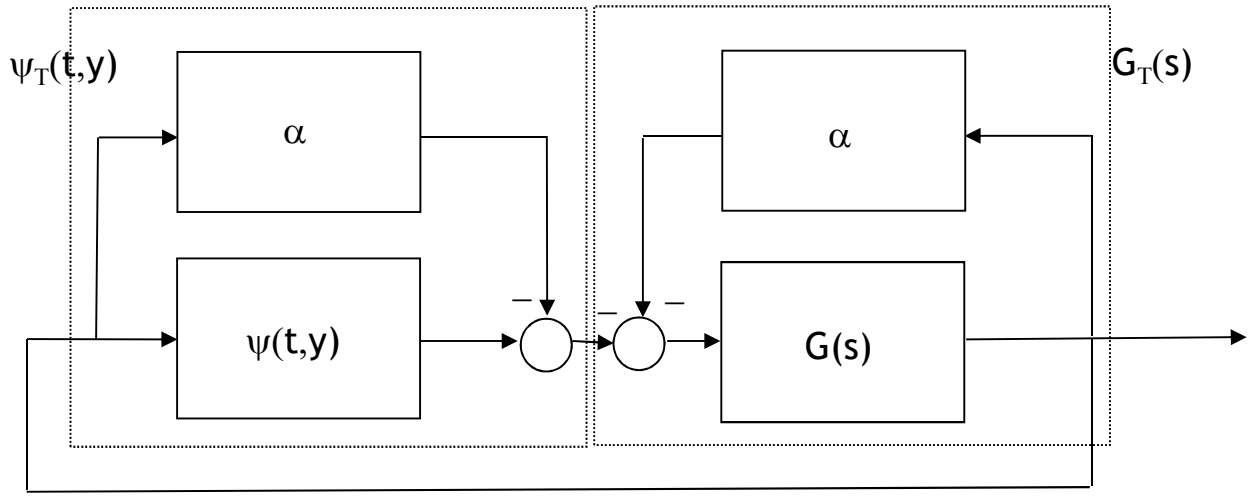

Sufficient condition for absolute stability (general case)

The system

$$\dot{x} = Ax + Bu$$
$$y = Cx$$
$$u = -\psi(t, y)$$

with (A,B) controllable, (A,C) observable, and $\psi(t,y)$ sector-bounded is absolutely stable if:

- $G_T(s) = \dfrac{G(s)}{1 + \alpha G(s)}$ is asymptotically stable;
- $Z_T(s) = \dfrac{1 + \beta G(s)}{1 + \alpha G(s)}$ is SPR.

The circle criterion

- Since $Z_T(s)$ has grel=0, the condition

$$Z_T(s) = \frac{1+\beta G(s)}{1+\alpha G(s)} \quad \text{SPR}$$

is equivalent to

$$Z_T(s) \quad \text{a.s.}$$
$$Re\left[\frac{1+\beta G(j\omega)}{1+\alpha G(j\omega)}\right] > 0, \quad \forall\omega \quad \text{SPR}$$

- A geometric interpretation can be given.

The circle criterion

- Let $G(j\omega) = Re(j\omega) + jIm(j\omega)$

- Then

$$Re\left[\frac{1+\beta G(j\omega)}{1+\alpha G(j\omega)}\right] = Re\left[\frac{1+\beta(Re(j\omega)+jIm(j\omega))}{1+\alpha(Re(j\omega)+jIm(j\omega))}\right] =$$

$$= Re\left[\frac{1+\beta Re(j\omega)+j\beta Im(j\omega)}{1+\alpha Re(j\omega)+j\alpha Im(j\omega)}\right] =$$

$$= Re\left[\frac{(1+\beta Re(j\omega)+j\beta Im(j\omega))(1+\alpha Re(j\omega)-j\alpha Im(j\omega))}{(1+\alpha Re(j\omega))^2+(\alpha Im(j\omega))^2}\right]$$

The circle criterion

- Evaluating the real part

$$Re\left[\frac{(1+\beta Re(j\omega)+j\beta Im(j\omega))(1+\alpha Re(j\omega)-j\alpha Im(j\omega))}{(1+\alpha Re(j\omega))^2+(\alpha Im(j\omega))^2}\right]=$$

$$=Re\left[\frac{(1+\alpha Re(j\omega))(1+\beta Re(j\omega))+\alpha\beta Im(j\omega)^2}{(1+\alpha Re(j\omega))^2+(\alpha Im(j\omega))^2}\right]$$

The circle criterion

- Therefore we have that the condition

$$Re\left[\frac{1+\beta G(j\omega)}{1+\alpha G(j\omega)}\right] > 0$$

- Can be written as

$$(1+\alpha Re(j\omega))(1+\beta Re(j\omega)) + \alpha\beta Im(j\omega)^2 > 0$$

- So, for $\beta > \alpha > 0$

$$(\frac{1}{\alpha} + Re(j\omega))(\frac{1}{\beta} + Re(j\omega)) + Im(j\omega)^2 > 0$$

- And for $\beta > 0 > \alpha$

$$(\frac{1}{\alpha} + Re(j\omega))(\frac{1}{\beta} + Re(j\omega)) + Im(j\omega)^2 < 0$$

The circle criterion: case $\beta > \alpha > 0$

- Assume that $\beta > \alpha > 0$; then

$$Re\left[\frac{1+\beta G(j\omega)}{1+\alpha G(j\omega)}\right] > 0, \quad \Rightarrow Re\left[\frac{1/\beta + G(j\omega)}{1/\alpha + G(j\omega)}\right] > 0$$

- In the complex plane:

  $\theta_\beta - \theta_\alpha < \pi/2$

  $\Rightarrow$

  $G(j\omega)$

  must not enter the circle $D(\alpha,\beta)$.

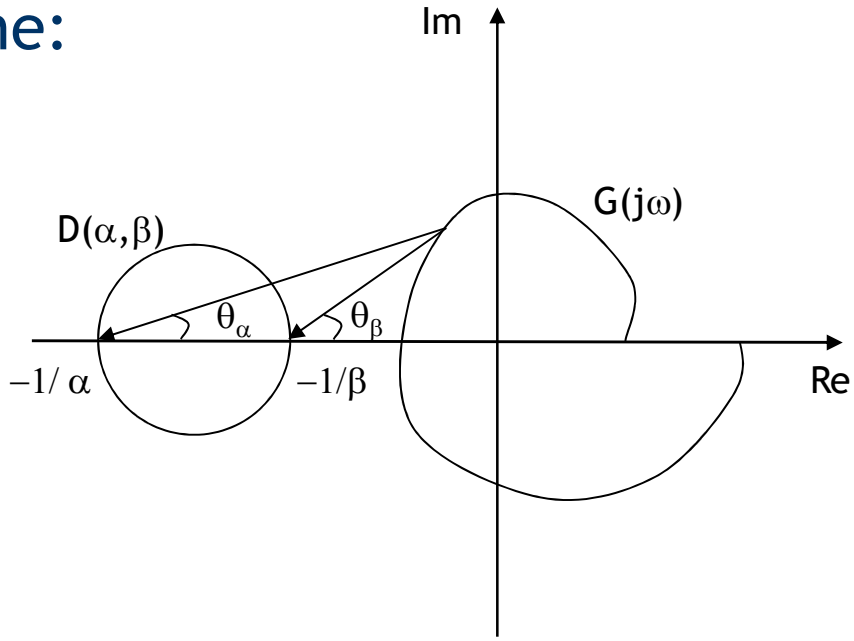

The circle criterion: case $\beta > \alpha > 0$

- A.s. of $Z_T(s)$ is equivalent to a.s. of

$$\frac{G(s)}{1+\alpha G(s)}$$

- So $Z_T(s)$ is a.s. if and only if G(s) satisfies the Nyquist criterion with respect to point $(-1/\alpha,0)$.

The circle criterion: case $\beta > \alpha = 0$

- Assume that $\beta > \alpha = 0$; then the condition is

$$Re\,[1 + \beta G(j\omega)] > 0, \quad \Rightarrow Re\,[G(j\omega)] > -\frac{1}{\beta}$$

- In the complex plane: $G(j\omega)$ must lie to the right of the line with abscissa $-1/\beta$.

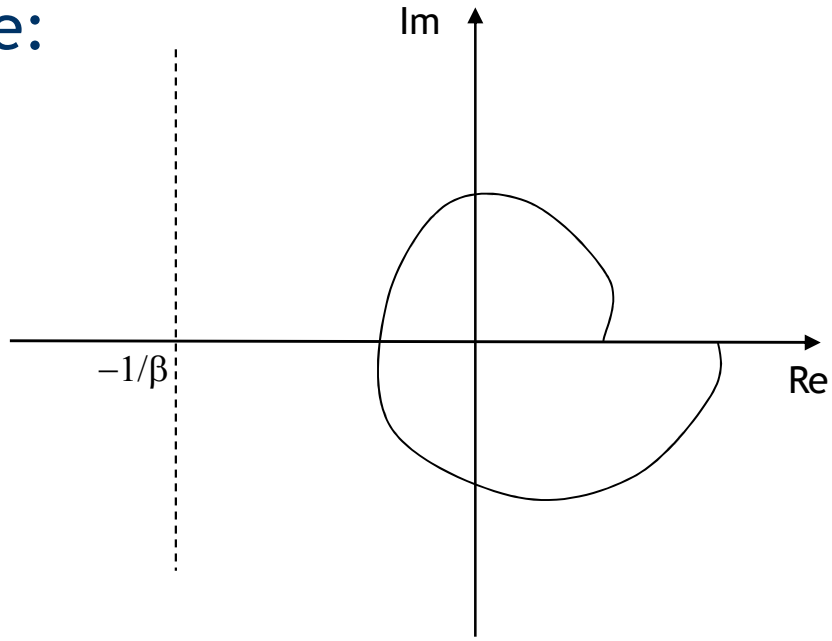

The circle criterion: case $\beta > \alpha = 0$

- A.s. of G(s) can be checked directly.

The circle criterion: case $\beta > 0 > \alpha$

- Assume that $\beta > 0 > \alpha$; then

$$Re\left[\frac{1+\beta G(j\omega)}{1+\alpha G(j\omega)}\right] > 0, \quad \Rightarrow Re\left[\frac{1/\beta + G(j\omega)}{1/\alpha + G(j\omega)}\right] < 0$$

- In the complex plane:
  $G(j\omega)$
  must lie inside the
  circle $D(\alpha,\beta)$.

The circle criterion: case $\beta > 0 > \alpha$

- If $G(j\omega)$ is inside $D(\alpha, \beta)$ then it can't encircle $-1/\alpha$;
- Therefore $G_T(s)$ is a.s. if $G(s)$ is.

$$G_T(s) = \frac{G(s)}{1 + \alpha G(s)}$$

Example 1

Consider the system

$$G(s) = \frac{1}{(s+1)(\frac{1}{2}s+1)(\frac{1}{3}s+1)}$$

Since G(s) is a.s. we can apply the criterion in two cases:

- $\beta > 0 > \alpha$;
- $\beta > \alpha = 0$;

Example 1

With $\beta=-\alpha=\gamma$ we construct a circle enclosing the Nyquist diagram:

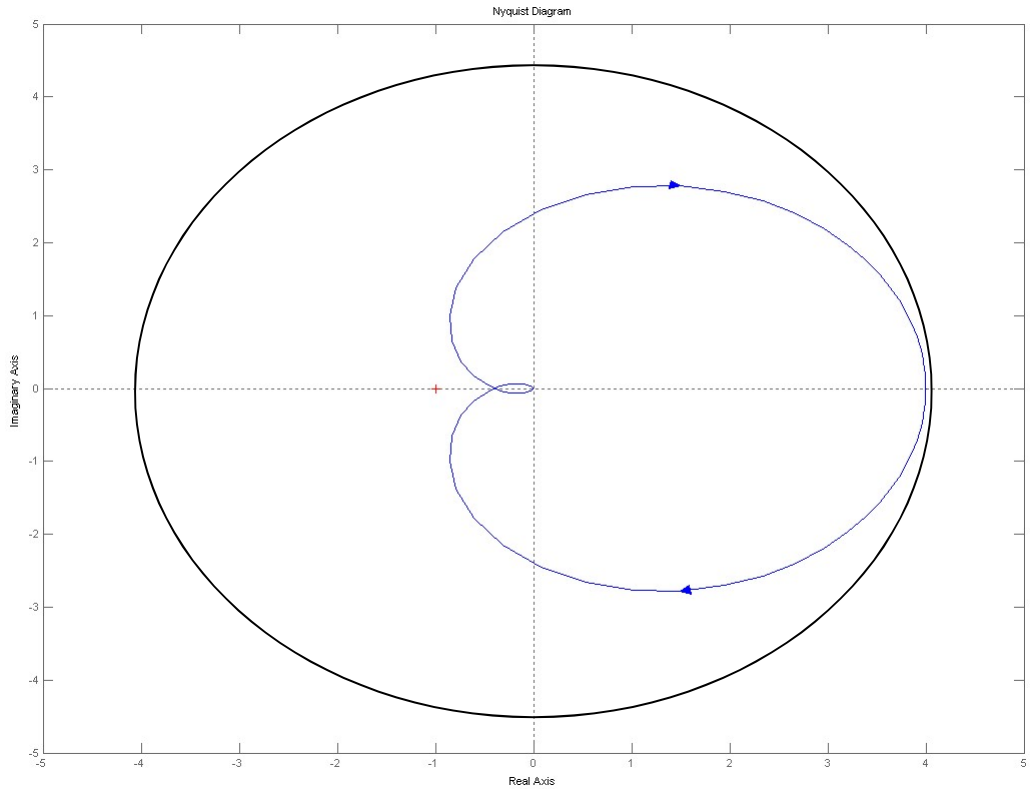

Example 1

With $\beta>0$ costruct a line limiting the Nyquist diagram to the left:

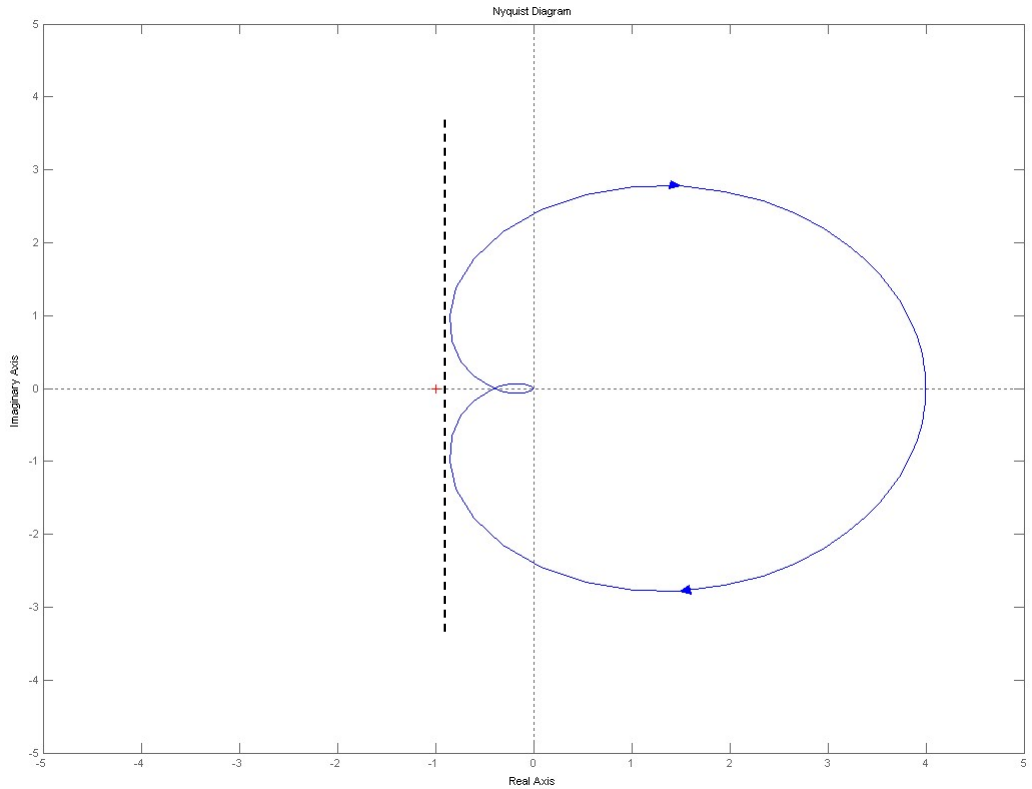

Example 1

Consider now a saturation nonlinearity; as $\beta > 1$, the feedback system

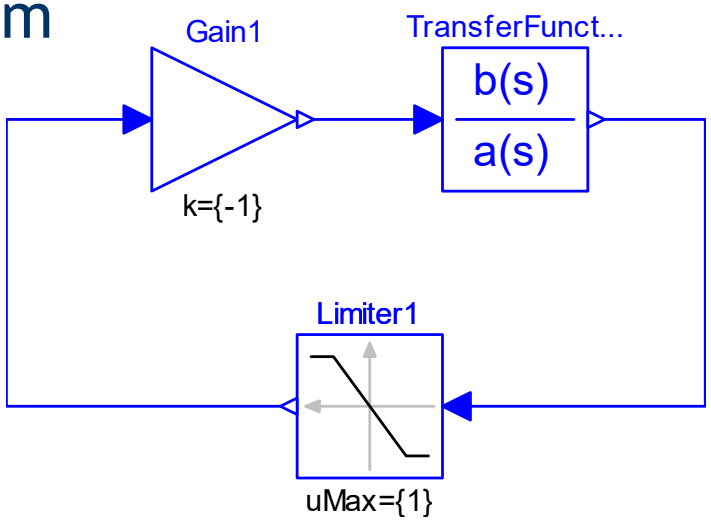

will have a GAS equilibrium at x=0.

Example 1

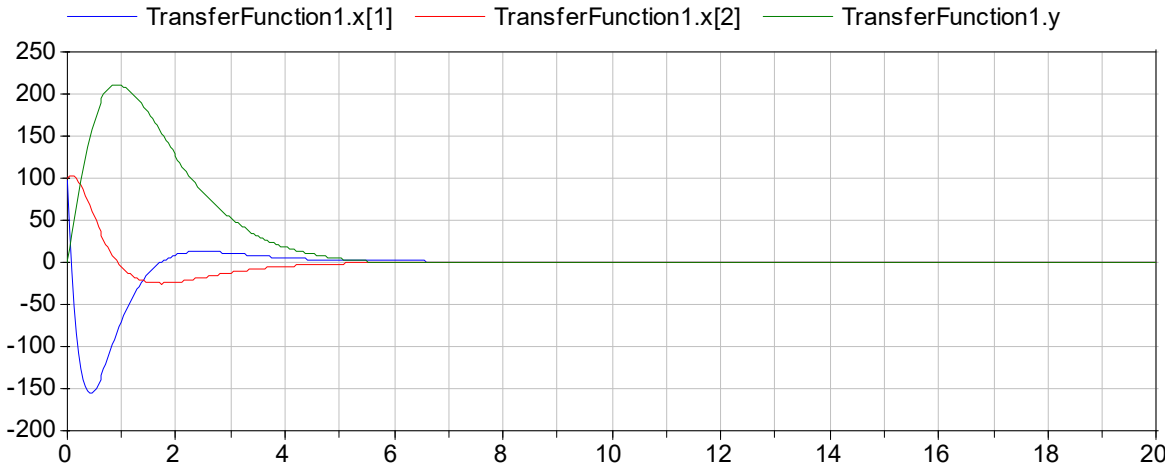
TransferFunction1.x[1]
TransferFunction1.x[2]
TransferFunction1.y
250
200
150
100
50
0
-50
-100
-150
-200
0
2
4
6
8
10
12
14
16
18
20

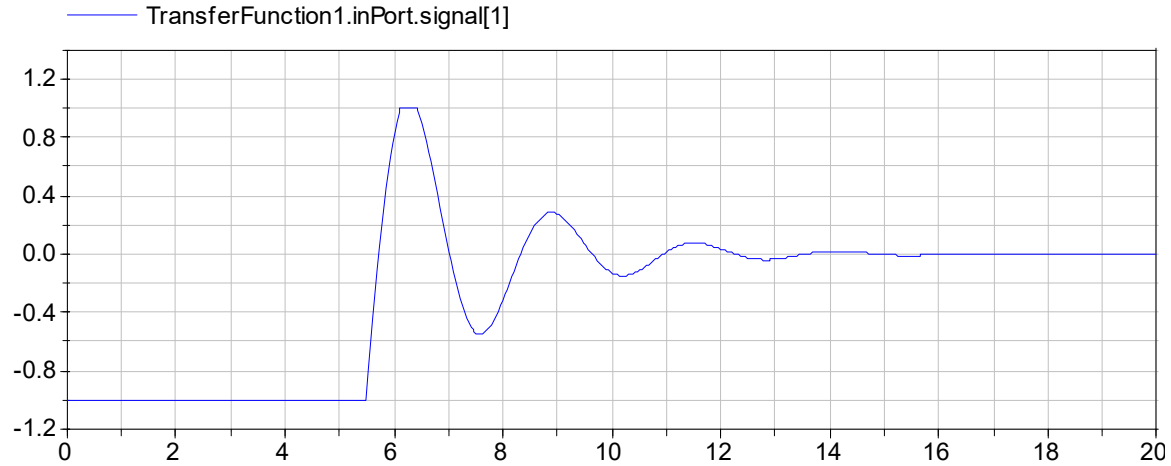
TransferFunction1.inPort.signal[1]
1.2
0.8
0.4
0.0
-0.4
-0.8
-1.2
0
2
4
6
8
10
12
14
16
18
20

Example 2

Consider the system

$$G(s) = \frac{\mu}{(s+1)^2(0.5s+1)^2}$$

under feedback with u=-sat(y):

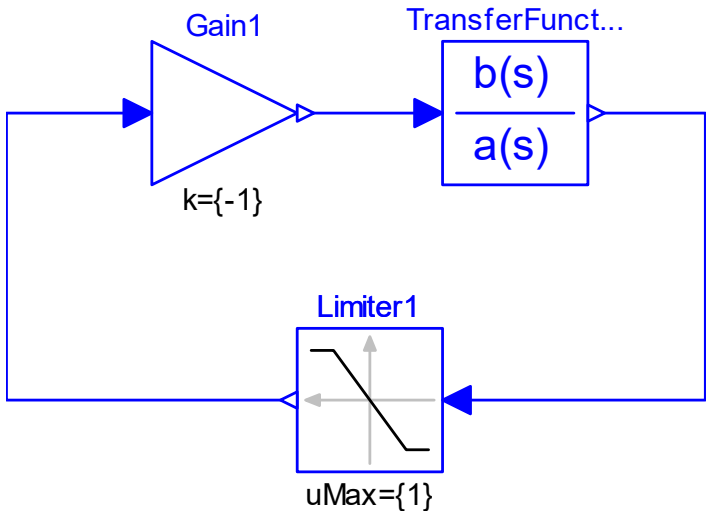

and study for which values of μ x=0 is GAS.

Example 2

u=-sat(y) is sector bounded with β=1 and α=0.

So we must check that:

- G(s) is a.s.;
- The Nyquist diagram of G(jω) is to the right of the line with abscissa -1.

Example 2

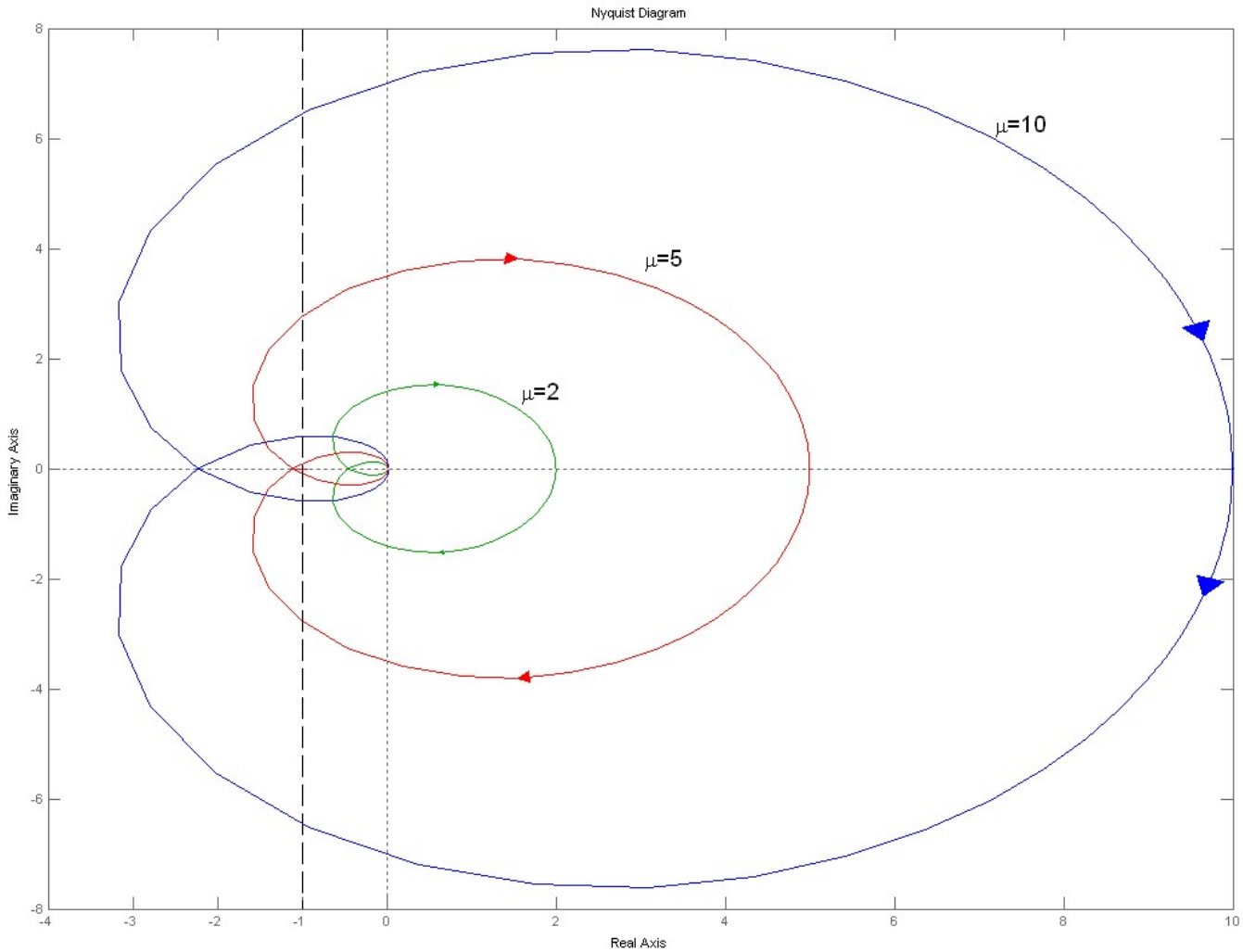
Nyquist Diagram
μ=10
μ=5
μ=2
Imaginary Axis
Real Axis
8
6
4
2
0
-2
-4
-6
-8
-4
-3
-2
-1
0
2
4
6
8
10

Example 2

- G(s) is a.s. regardless of μ;
- The Nyquist diagram of $G(j\omega)$ is to the right of the line with abscissa -1 for sufficiently small μ (es. μ=2).

Example 2

Simulation for μ=2.

What happens for larger values of μ?

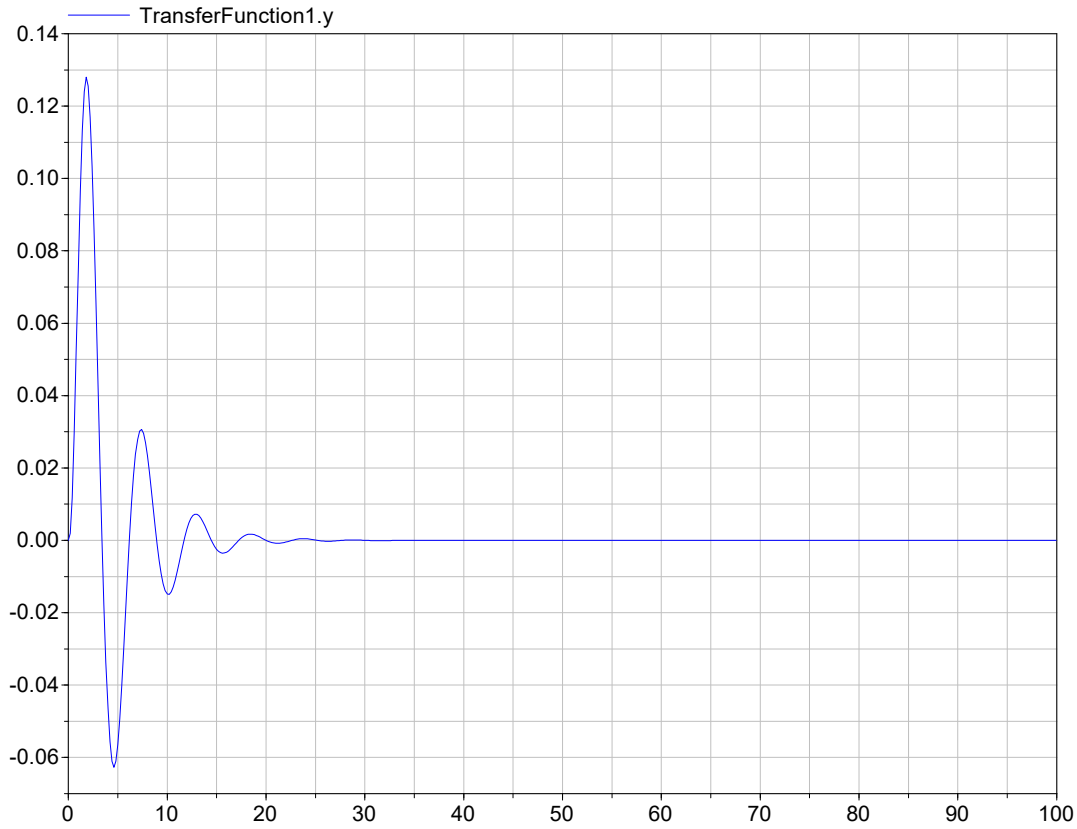

Example 2

Simulation for μ=5 and μ=10:

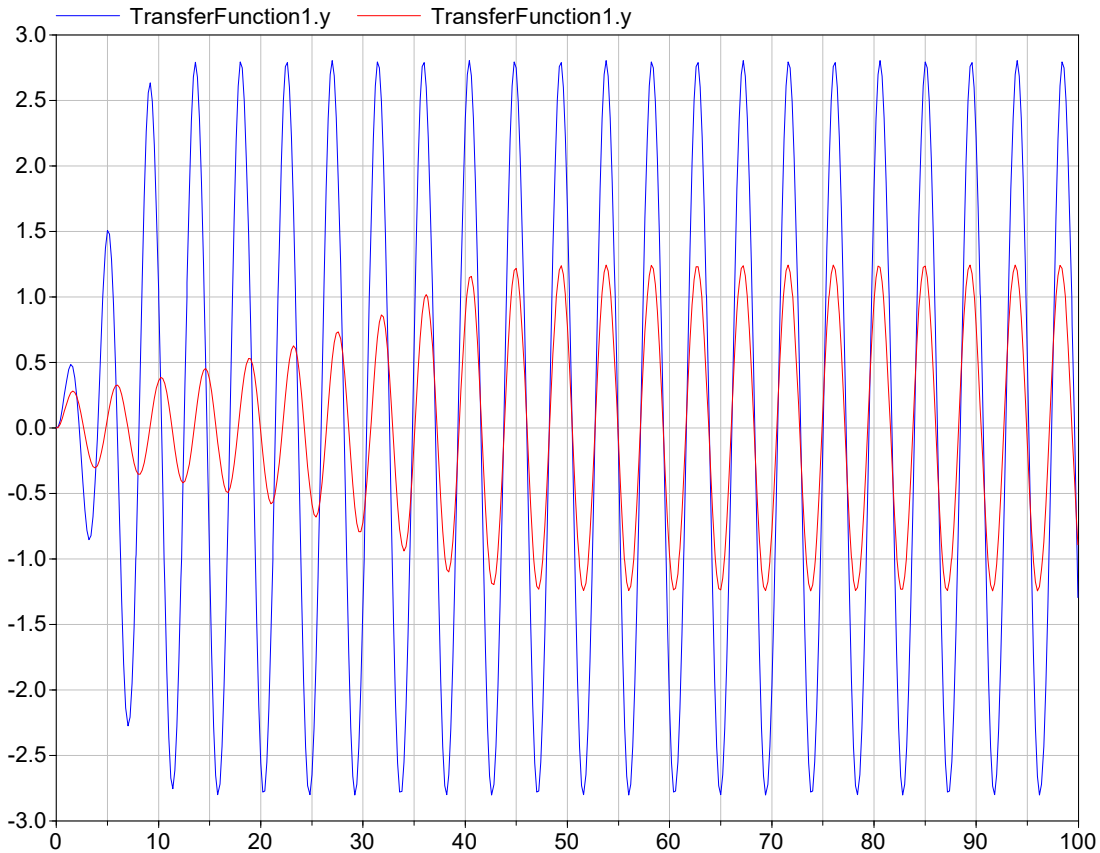

Notes

- Absolute stability can be extended to MIMO systems.
- In the MIMO case the graphical interpretation becomes less intuitive.
- However one can solve numerically the SPR conditions given by the KYP Lemma in a very efficient way.
- All the above results apply to *locally* sector-bounded nonlinearities.