POLITECNICO DI MILANO





H-infinity rotorcraft attitude control design with rotor state feedback

Simone Panza <simone.panza@polimi.it>
Dipartimento di Scienze e Tecnologie Aerospaziali (DAER)

7 challenges towards a successful helicopter [Leishman, 2006]

- Understanding basic aerodynamics of vertical flight
- High power-to-weight ratio engine
- Low weight (structure + engine)
- Counteract rotor torque reaction
- Stability and control
- Vibrations
- Engine fault tolerance

Motivation and state of the art (1)

Future rotorcraft is expected to

- meet more and more stringent performance requirements (agility, manoeuvrability)
- reduce pilot workload (adverse weather conditions, DVE)

Motivation and state of the art (2)

Current helicopters AFCS:

- stability augmentation system (SAS)
- attitude feedback control law: fuselage motion measurements

High gain (i.e., high bandwidth) feedback control can be determining in achieving requirements in terms of handling qualities (see ADS-33 spec).

Need for

- accurate dynamic model of rotorcraft
- robustness with respect to model uncertainty
- simple AFCS architecture

Objectives

Set-up of a rotorcraft attitude control design methodology

- Robustness wrt model uncertainty
- Requirements:
  - Standard (ADS-33)
  - Non-standard (from literature)
- Architecture consistent with industrial practice

Outline

- Problem formulation within the $\boldsymbol{H}_\infty$ framework
- Rotor state feedback
- Robustness to model uncertainty

- Applications
  - Robust helicopter attitude control design
  - Multivariable tilt-rotor attitude control

H_∞ framework

- u control inputs
- y measurable outputs
- w performance inputs (reference signals, disturbances, noise)
- z performance outputs (tracking errors, control inputs,…) to be minimized

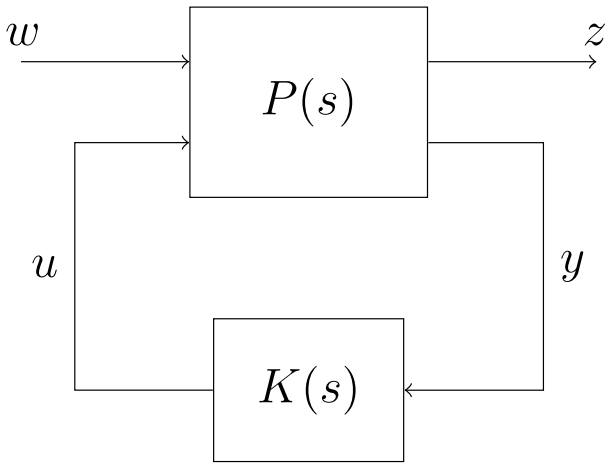

Optimal H_∞ problem

$$\begin{aligned} \min_K \quad & \gamma \\ \text{subject to} \quad & \\ \|T_{z,w}(s)\|_\infty \quad & \leq \quad \gamma \\ K \quad & \in \quad \mathcal{K} \end{aligned}$$

(Set of stabilizing controllers)

Control requirements → weights over the performance signals

Mixed-sensitivity H_∞ formulation

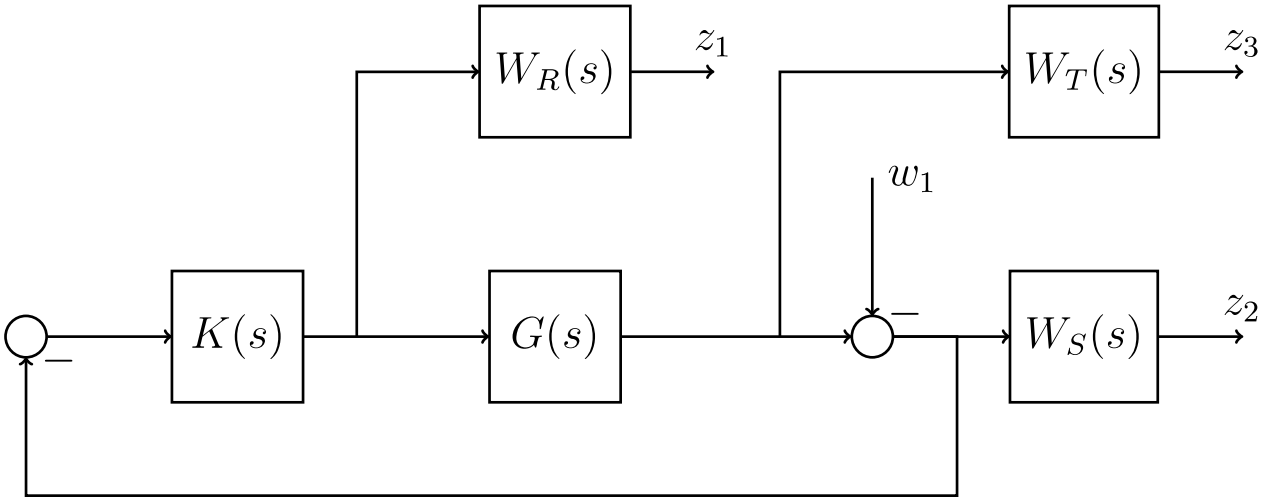

$G\,[p \times m]$

$w_1\,[p \times 1]$

$z_1\,[m \times 1]$

$z_2,\, z_3\,[p \times 1]$

- Square, diagonal weight matrices on the performance outputs
- w_1 can be interpreted both as a disturbance on the plant output or as the reference signal

$$\begin{vmatrix} z_1 \\ z_2 \\ z_3 \end{vmatrix} = \begin{vmatrix} W_R(s)\,R(s) \\ -W_S(s)\,S(s) \\ W_T(s)\,T(s) \end{vmatrix} w_1$$

- $S(s) = (I + G(s)\,K(s))^{-1}$
- $R(s) = K(s)\,(I + G(s)\,K(s))^{-1}$
- $T(s) = G(s)\,K(s)\,(I + G(s)\,K(s))^{-1}$

Frequency weights on the sensitivity functions!

Classical vs structured H_∞

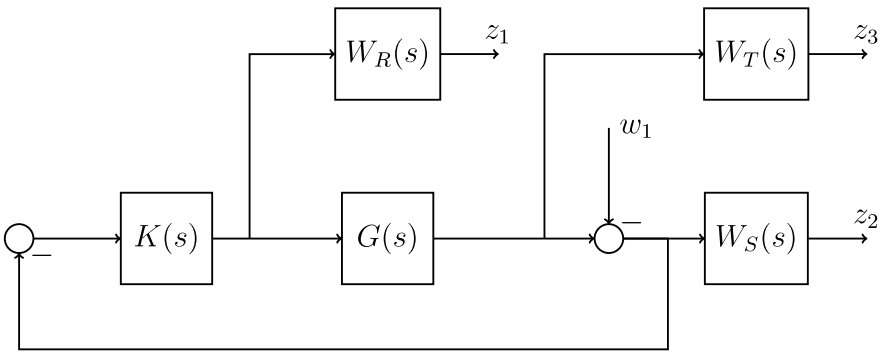

Structured H_∞:

- ✓ Define control system architecture w/tunable parameters→ adapt to existing FCS structure (e.g. retrofitting)
- ✓ Introduce optimization constraints which would not be available by means of classical H_∞ techniques
- ✓ Multiple system configurations
- ✗ Optimization problem is non-convex (local minima)
- ✗ Sub-optimal wrt classical H_∞

Classical H_∞:

- ✓ Suitable to MIMO systems
- ✓ Optimal regulator which satisfies the control requirements encoded as frequency weights
- ✓ Convex optimization problem (global optimum)
- ✗ Regulator is dynamic and high order (plant+weights)
- ✗ Full $[m \times p]$ transfer matrix

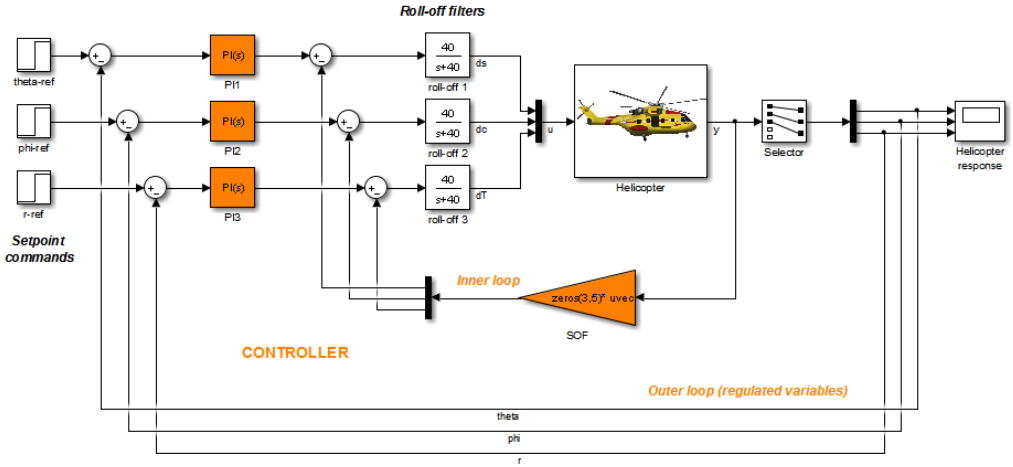

Software tools

Matlab Robust Control Toolbox

- Classical $\boldsymbol{H}_\infty$ synthesis: `hinfsyn()`
- Structured $\boldsymbol{H}_\infty$ synthesis: `systune()`

Read the documentation!

Choice of the frequency weights

Transfer function $W(s)$

- Stable
- Minimum phase
- Proper

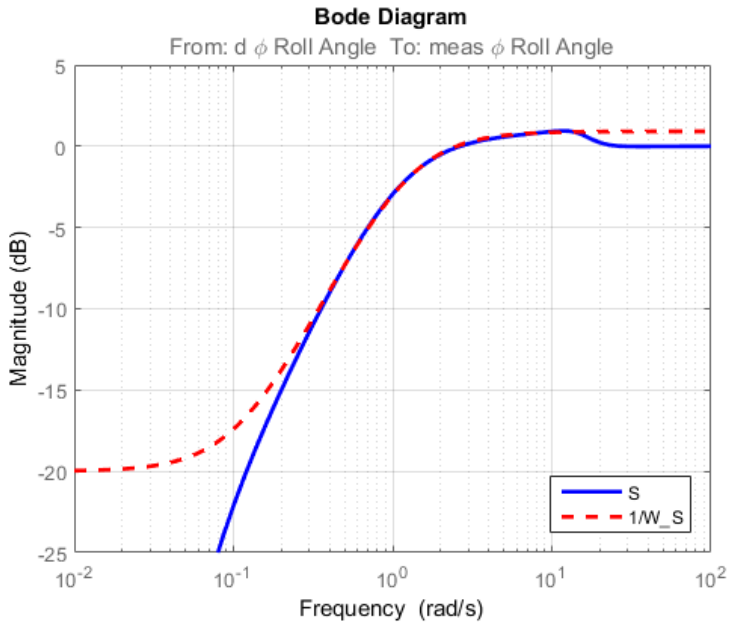

General guideline to choose (SISO) weights

$$\|W(s)F(s)\|_\infty \leq 1 \leftrightarrow |W(\jmath\omega)F(\jmath\omega)| \leq 1 \ \forall\omega$$

$$|F(\jmath\omega)| \leq \frac{1}{|W(\jmath\omega)|} \forall\omega$$

Shaping function

Approach

An optimization-based control law synthesis methodology is taken into account:

- **Structured control law synthesis**: capability to impose the structure of control law architecture *a priori* and tune the control law parameters
- Mixed sensitivity H-infinity: cost function to be optimized is dependent on (closed loop) **frequency weighted** sensitivity functions
- **Control law requirements** are encoded into frequency dependent weights
- **Robustness**: uncertainty description is introduced in the control law synthesis phase so as to guarantee robustness properties

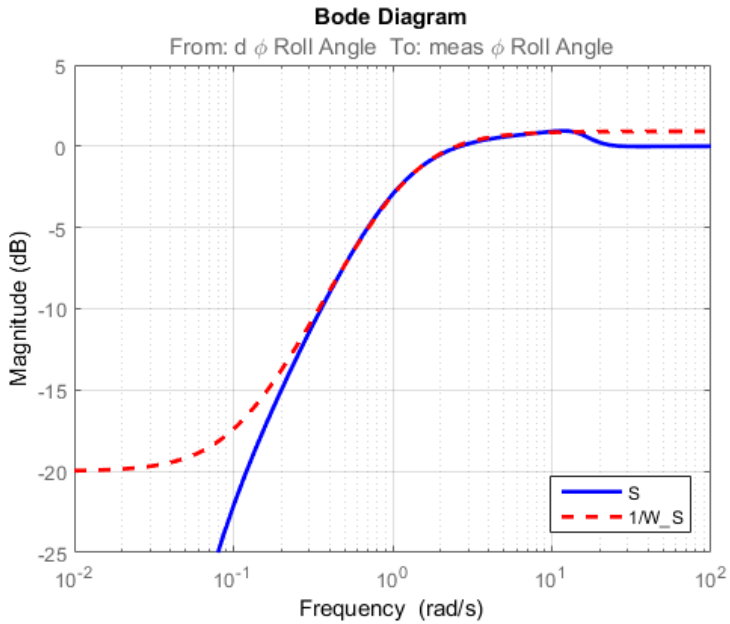

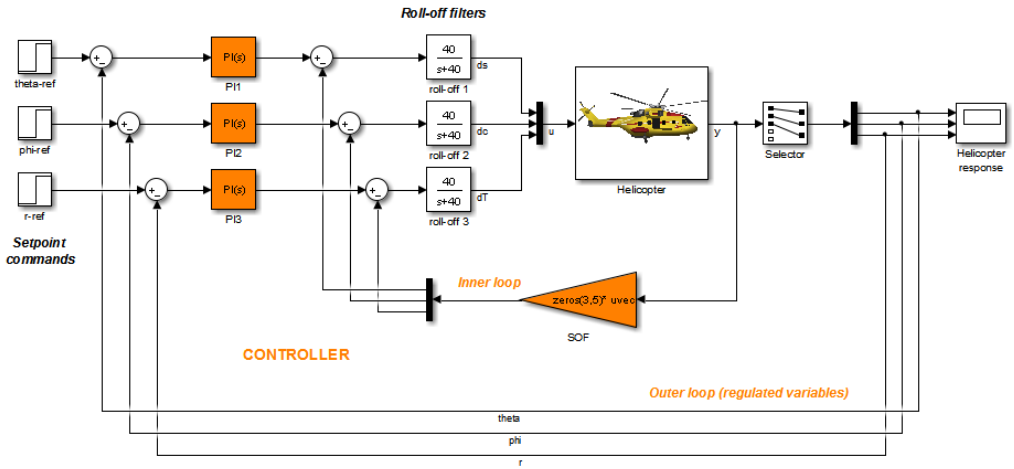

Formulation of the attitude control problem in the H_∞ framework

Requirements are encoded as frequency weights and imposed on proper closed-loop transfer functions (mixed-sensitivity):

- Stabilization (default)
- Performance → sensitivity function
- Control action moderation → control sensitivity function
- Robustness → complementary sensitivity function

$$S(s) = (I + G(s)K(s))^{-1}$$ Sensitivity

$$R(s) = K(s)(I + G(s)K(s))^{-1}$$ Control sensitivity

$$T(s) = G(s)K(s)(I + G(s)K(s))^{-1}$$ Complementary sensitivity

Optimization problem set-up

- Structured control law $K(\theta)$
- Tunable parameters $\theta \in \Theta \subseteq \mathbb{R}^{n_\theta}$

(e.g. upper and lower bounds) $\underline{\theta}_k \leq \theta_k \leq \bar{\theta}_k \qquad k = 1..n_\theta$

weight

Closed-loop transfer function

- Scalar requirements $J_i(\theta) = \|W_i(s) S_i(s,\theta)\|_\infty \qquad i = 1..n$

- Scalarized cost function $J(\theta) = \max_{i=1..n} J_i(\theta)$

Unconstrained H_∞ multi-objective optimization problem

$$
\begin{aligned}
\min_{\theta} J(\theta) &= \min_{\theta} \max_{i=1..n} J_i(\theta) \\
\text{subject to} & \\
\underline{\theta}_k \leq \theta_k &\leq \bar{\theta}_k \qquad k = 1..n_\theta \\
J_i(\theta) &= \|W_i(s) S_i(s,\theta)\|_\infty \qquad i = 1..n
\end{aligned}
$$

Constrained H_∞ multi-objective optimization problem

Define additional constraints (i.e., higher priority requirements):

$$H_j(\theta) = \|W_j(s)S_j(s,\theta)\|_\infty \qquad j = 1..c$$

$$H(\theta) = \max_{j=1..c} H_j(\theta)$$

$$\min_\theta J(\theta) = \min_\theta \max_{i=1..n} J_i(\theta)$$

«soft» requirements

subject to

$$\max_{j=1..c} H_j(\theta) \leq 1$$

«hard» requirements

$$\underline{\theta}_k \leq \theta_k \leq \bar{\theta}_k \qquad k = 1..n_\theta$$

$$J_i(\theta) = \|W_i(s)S_i(s,\theta)\|_\infty \qquad i = 1..n$$

$$H_j(\theta) = \|W_j(s)S_j(s,\theta)\|_\infty \qquad j = 1..c$$

Role of rotor dynamics in control-oriented attitude models

- Rotor and fuselage are dynamically coupled in the attitude control frequency range (pitch/roll moments depend on longitudinal/lateral flap angle)
- Rotor dynamics introduce phase lag in the loop
- High gain control (with classical attitude control laws) results in poor stability margin → bandwidth of the attitude loop is limited

Low order equivalent system are used in attitude control design
Modeling complexity depends on bandwidth of the attitude loop:

- Low-bandwidth: rotor can be interpreted as an actuator and its (fast) dynamics can be simplified
- High-bandwidth: rotor dynamics should be accounted for in the model used in attitude control design

1st order models
(*quasi-steady* rotor)

$$\frac{p}{\delta_a} = \frac{K}{s+L} e^{-\tau s}$$

2nd order models
(coupled fuselage-rotor)

$$\frac{p}{\delta_a} = \frac{K(s+z)}{s^2+a_1 s+a_2} e^{-\tau s}$$

Bandwidth vs damping trade-off: [helicopter roll attitude control law]

$$\delta_a = -\left(K_\varphi(\varphi - \varphi^0) + K_p p\right)$$

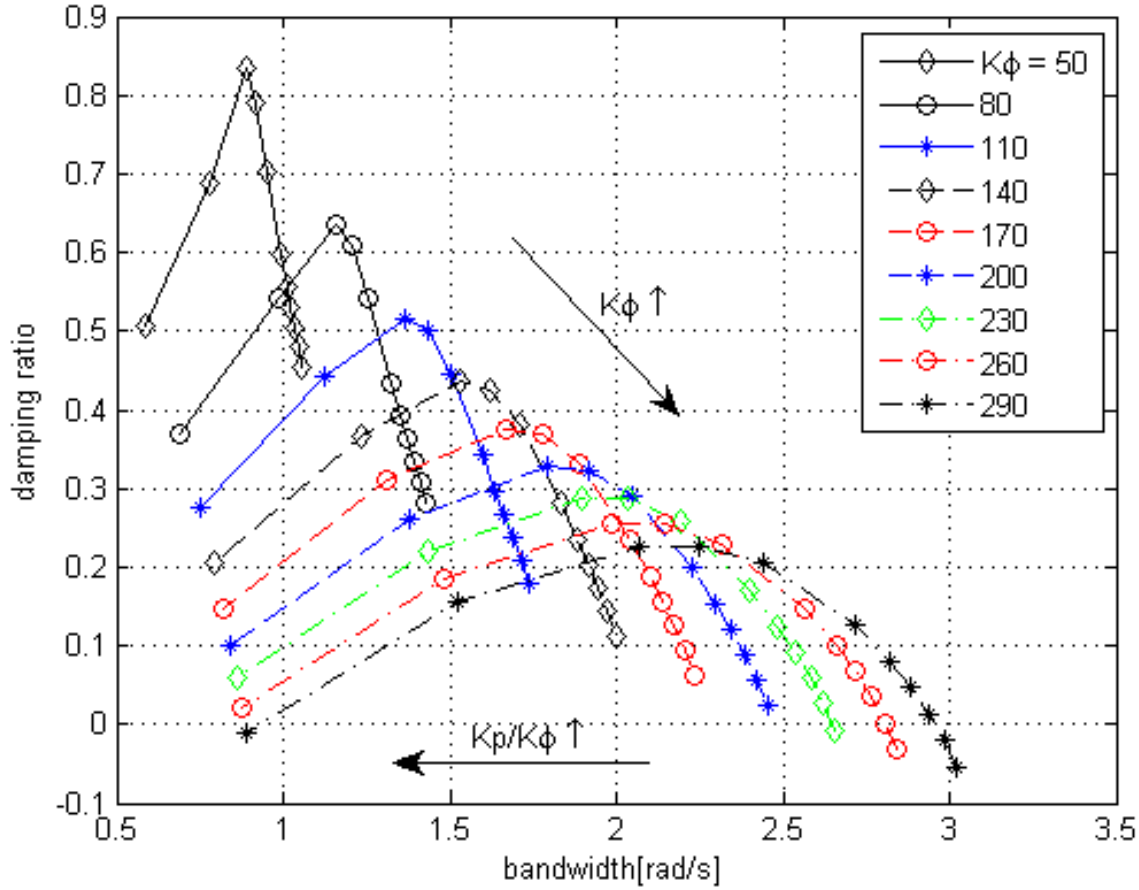

$$K_\varphi \left[\frac{\%}{rad}\right]$$

$$K_p \left[\frac{\%}{rad/s}\right]$$

$$\frac{K_p}{K_\varphi} = \begin{bmatrix} 0.02 \\ 0.04 \\ 0.06 \\ 0.08 \\ 0.1 \\ 0.13 \\ 0.2 \\ 0.25 \\ 0.3 \\ 0.5 \\ 1 \end{bmatrix}$$

Bandwidth is computed on sensitivity function of φ $(-3[dB])$

Rotor state feedback

In addition to fuselage measurements (attitude angles and rates), flap angle measurement is introduced into control law (RSF)

Example: helicopter roll attitude control law

$$\delta_a = -\left(K_\varphi(\varphi - \varphi^0) + K_p p + K_{\beta_{1s}}\beta_{1s}\right)$$

fuselage measurements

RSF

Rotor state feedback: performance

- Feedback from rotor states introduces phase lead in the loop
- RSF allows to increase bandwidth while maintaining adequate stability margin
- Overcome the trade-off between bandwidth/damping ratio

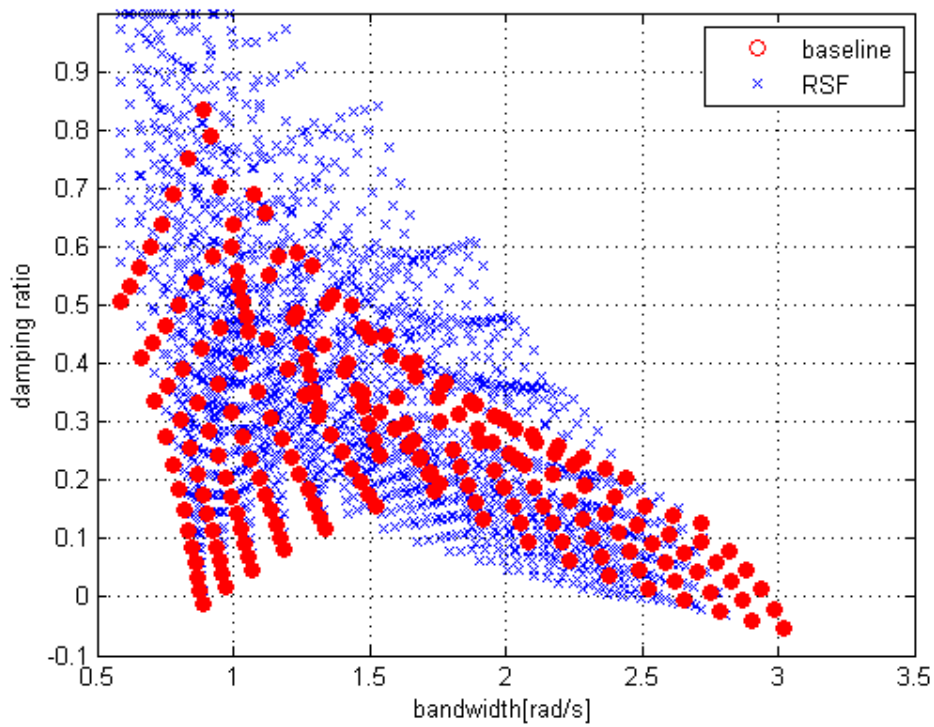

S. Panza and M. Lovera (2015) *Rotor state feedback in the design of rotorcraft attitude control laws,* in 3rd CEAS Specialist Conference on Guidance, Navigation and Control, Toulouse, France.

$$K_{\beta_{1s}} = \begin{bmatrix} 0 & 30 & 60 & 90 & 120 & 150 & 180 & 210 & 240 \end{bmatrix}$$

Rotor state feedback: safety (1)

Rotor flapping is related to cyclic (1/rev) yoke chord bending loads, both in helicopter and airplane modes [Manimala et al., 2004; King et al, 1993]

Enforce safety constraints: reduce amount of flapping

- reduce fatigue on structural components
- avoid contact between blade and wing

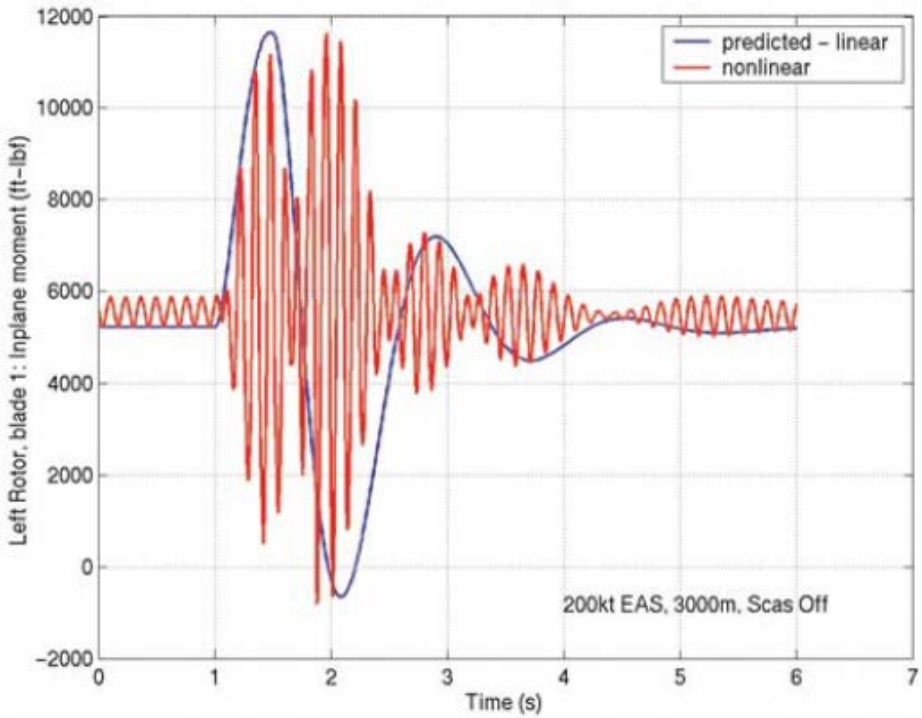

Figure 13. In-plane bending moment in a 2·5g pull-up manoeuvre (200kt, 3,000m): FXV-15.

Manimala et al. (2004) Load alleviation in tilt rotor aircraft through active control; modelling and control concepts. The Aeronautical Journal, 108, 169-184.

Rotor state feedback: safety (2)

Load limiting control laws were developed to alleviate V-22 structural issues

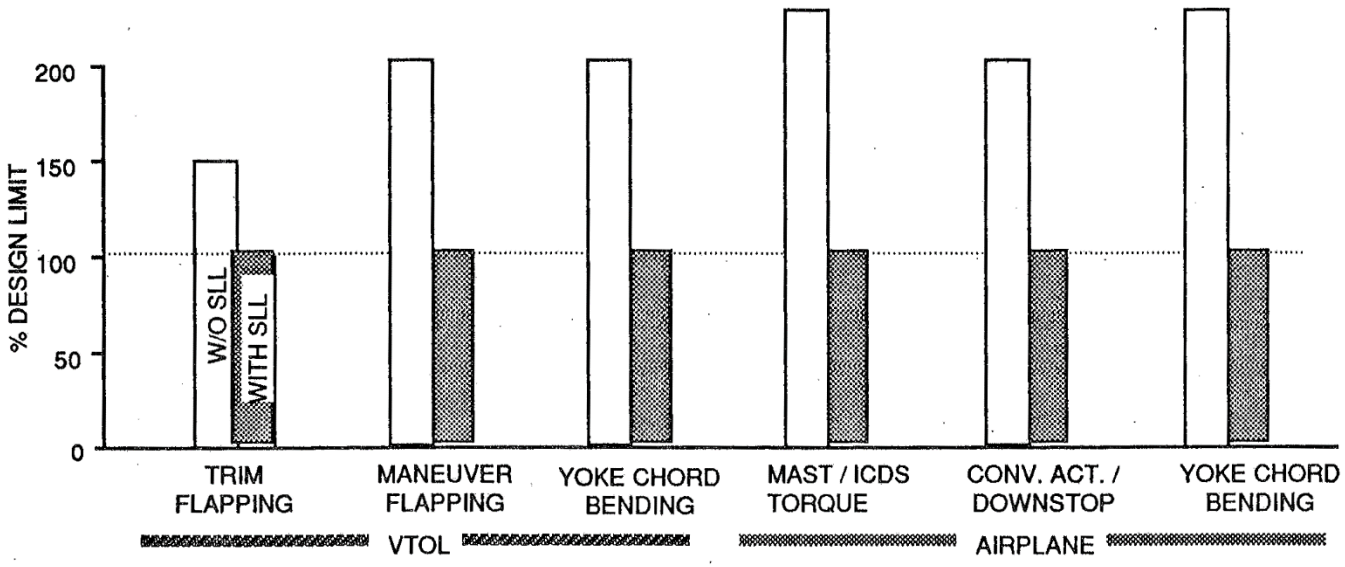

Fig. 21 V-22 Critical component loads for worst-case maneuvers

D.W. King, C. Dabundo, R.L Kisor and A. Agnihotri. V-22 load limiting control law development, 49th AHS annual forum, 1993

Uncertainty description in the frequency domain

Idea: to represent model uncertainty by

- A nominal LTI model (with no uncertainty) $G(s)$
- A set of perturbed models Π
- The generic perturbed model in the set $G_p(s) \in \Pi$

A particular model in the set of perturbed models can be obtained by the combination of

- A nominal branch
- An uncertain branch

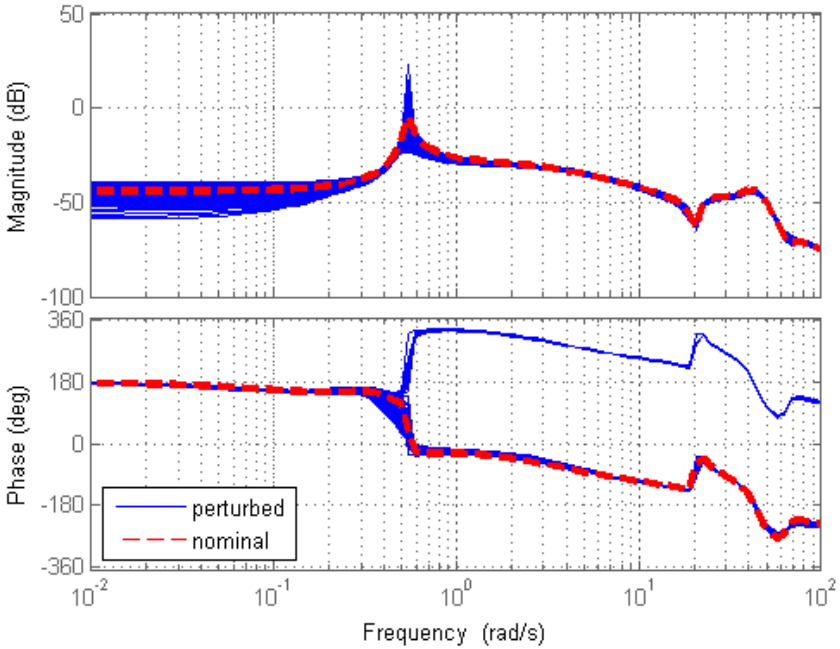

Uncertainty description in the frequency domain

The uncertain branch is made up of

- An uncertain, stable transfer function bounded in magnitude $\Delta(s)$
- A stable transfer function

$$W(s)$$

which can be interpreted as a weight which determines the amount of uncertainty as a function of frequency (namely, the uncertainty description)

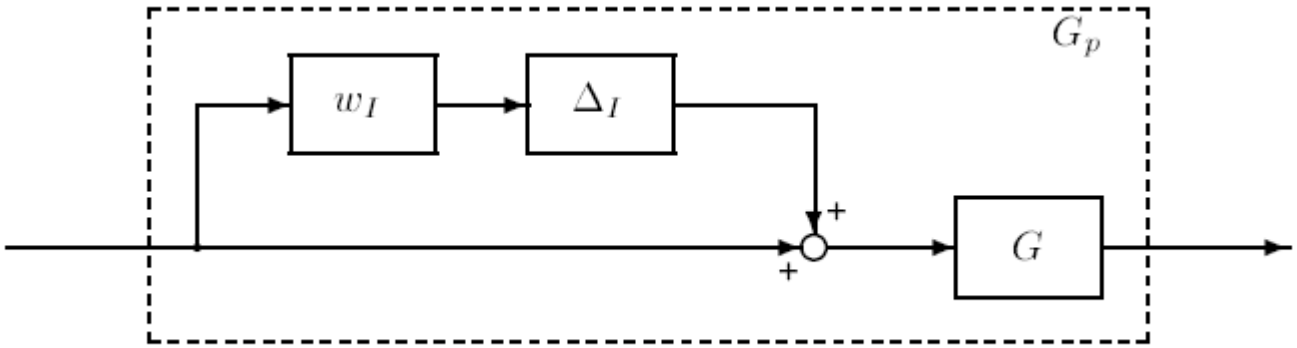

Choice of the uncertainty description: SISO case

In the multiplicative uncertainty case, the uncertainty description can be computed as follows:

- For each of the perturbed models, compute

$$\frac{G_p(s)-G(s)}{G(s)}$$

- Get the magnitude upper envelope

$$l(\omega) = \max_{G_p \in \Pi} \left| \frac{G_p(j\omega) - G(j\omega)}{G(j\omega)} \right|$$

- Find a rational transfer function which approximates the upper envelope

$$|W(j\omega)| \geq l(j\omega), \forall \omega$$

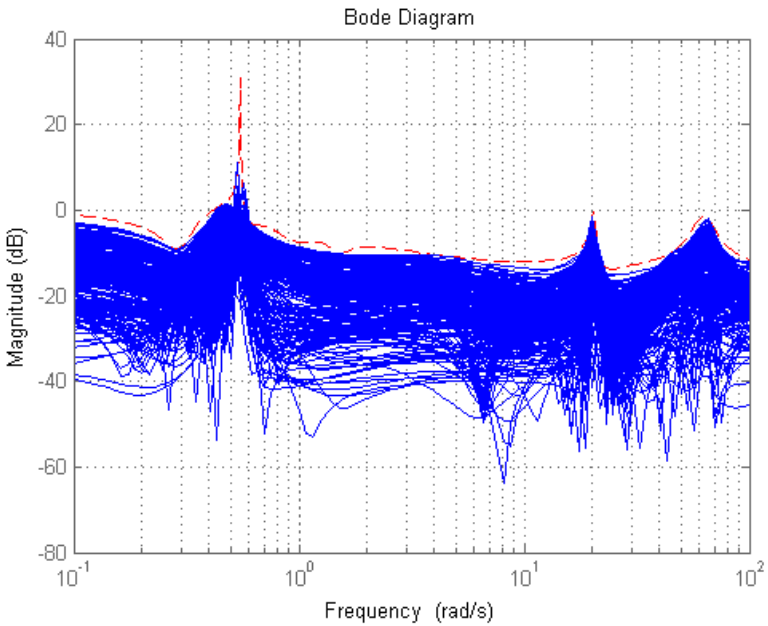

Robust stability (RS)

The closed loop system is stable for any perturbed system in the set

$$L(s) = G(s)K(s)$$

Loop transfer function

$$T(s) = L(s)\left(I + L(s)\right)^{-1}$$

Complementary sensitivity function

$$T(s) = \frac{L(s)}{1+L(s)}$$

Complementary sensitivity function (SISO)

$$\|T(s)W(s)\|_\infty < 1 \Leftrightarrow \bar{\sigma}\left(T(\jmath\omega)W(\jmath\omega)\right) < 1, \forall\omega$$

Maximum singular value operator

$$\bar{\sigma}\left(T(\jmath\omega)W(\jmath\omega)\right) = |T(\jmath\omega)W(\jmath\omega)| \quad \text{(SISO)}$$

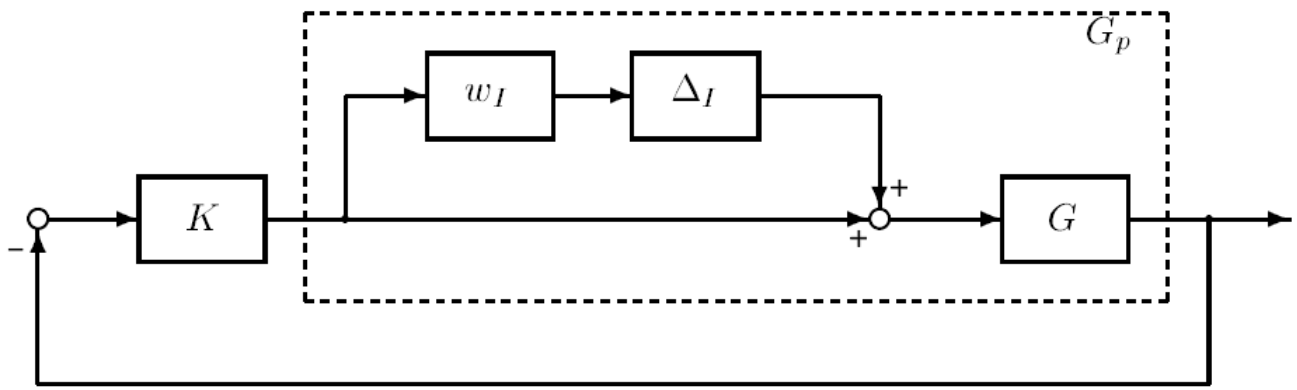

Figure 7.10: Feedback system with multiplicative uncertainty

Application case #1
Robust helicopter attitude control

Helicopter model

- FLIGHTLAB (http://www.flightlab.com)
- 58 states, **linearized** in hover (parameters: forward speed, mass, altitude, CG position, …)
- Fully-coupled

Fuselage dynamics:

- translational (u, v, w) (**low** frequency)
- attitude (φ, θ, ψ) and rates (p, q, r) (**medium** frequency)

Main rotor dynamics: (**medium-high** frequency)

- MBC flap+lag (+ derivatives) $\longrightarrow$ LTI model
- Inflow+wake

Tail rotor dynamics (collective flap+inflow)

MBC transformation

Objective: to represent the rotor blades motion as a whole

Rotor DOFs transformation: coordinate change

- From the frame rotating with the hub…
- … to the frame fixed in the fuselage

$$\begin{cases} \beta_0 & = \frac{1}{N_B}\sum_{i=1}^{N_B}\beta_i \\ \beta_{nc} & = \frac{2}{N_B}\sum_{i=1}^{N_B}\beta_i\cos(n\psi_i) \\ \beta_{ns} & = \frac{2}{N_B}\sum_{i=1}^{N_B}\beta_i\sin(n\psi_i) \\ \beta_{N/2} & = \frac{1}{N_B}\sum_{i=1}^{N_B}\beta_i(-1)^i \end{cases}$$

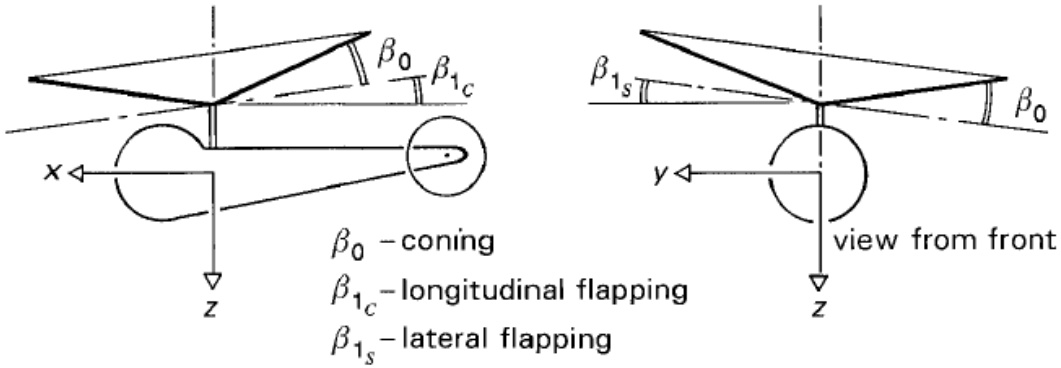

New DOFs (expressed in body axes frame):

- β_0 coning angle
- β_{1c} cone axis tilt angle in forward direction
- β_{1s} lateral tilt
- …other *reactionless* DOFs

Tip path plane (TPP)

Actuators & sensors

- Two **actuators** (lateral/longitudinal cyclic), both of them can be modeled as a 3rd order system
  - bandwidth $\omega \sim 50\, rad/s$
- Two **sensors** (roll/pitch rate), both of them can be modeled as a 2nd order system
  - bandwidth $\omega \sim 50\, rad/s$
  - damping ratio $\xi \sim 0.7$
- **Pure time delay** (10[ms] due to ZOH + 10[ms] due to signal processing)

Overall augmented system: +10 states, 20[ms] time delay

Actuators & sensors (eigenvalues)

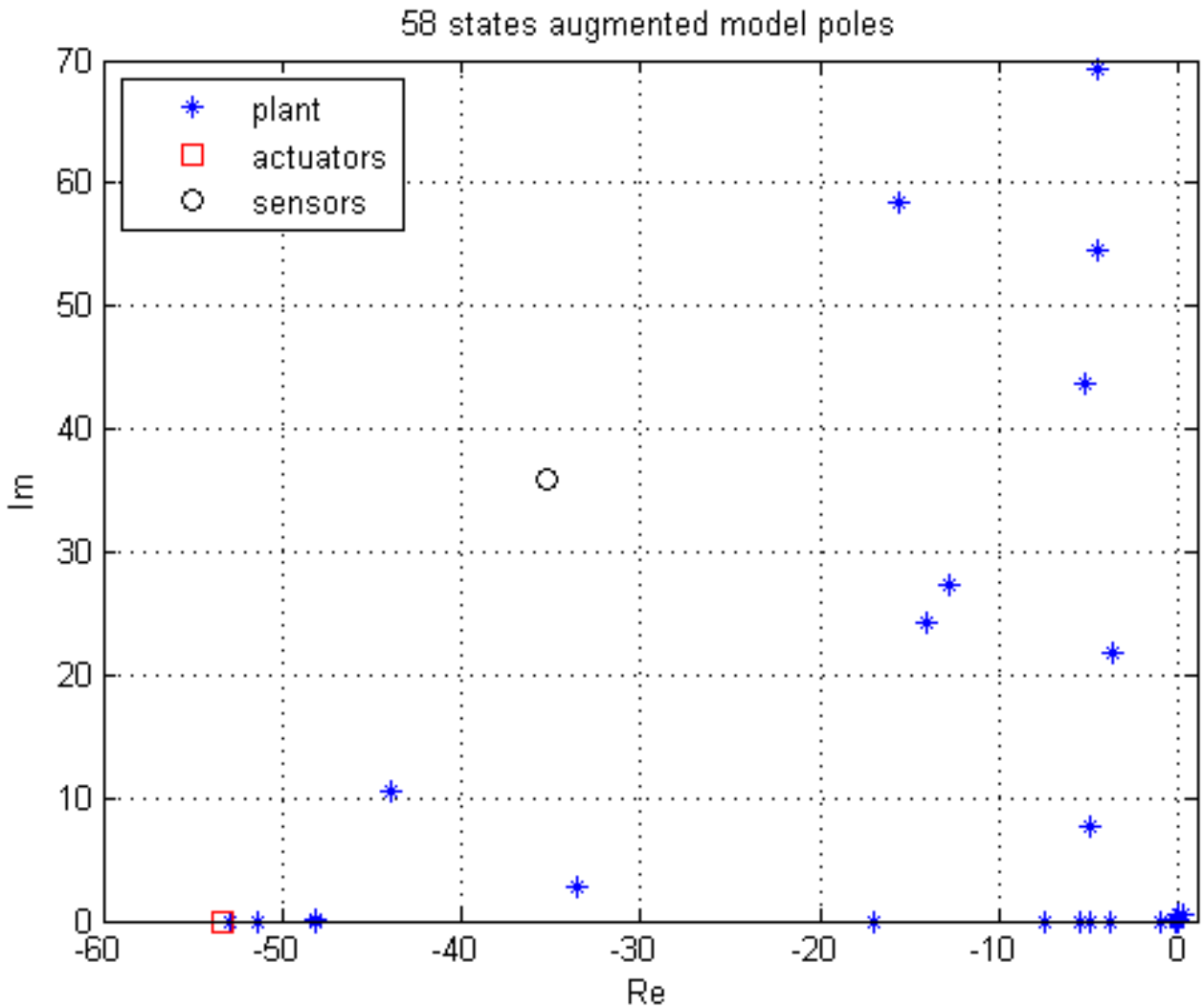

Actuators & sensors (ideal vs augmented)

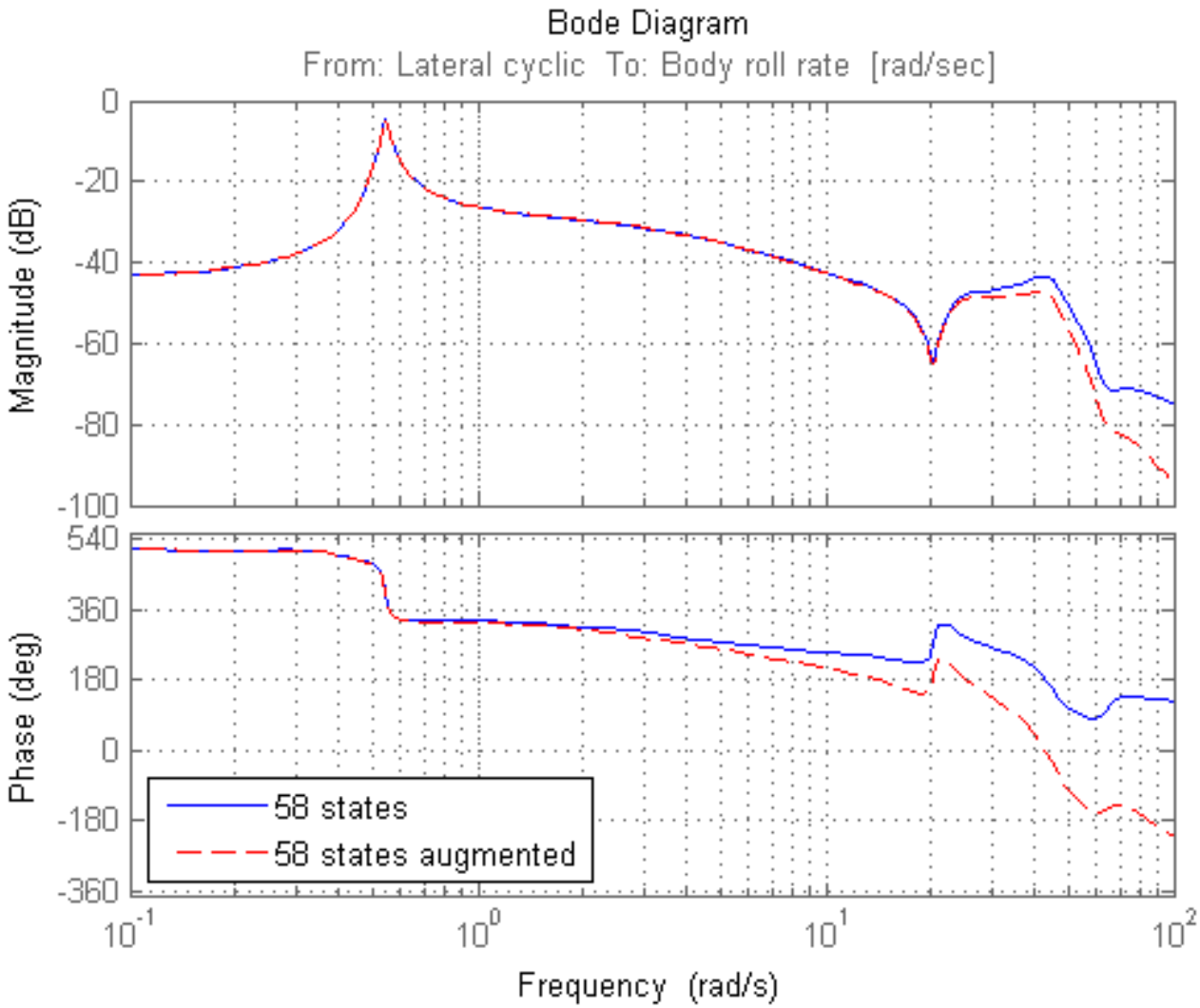

Model reduction (25 states)

- In order to focus on the pitch/roll attitude dynamics, we consider a reduced-order model
- **25 states** (+10 due to actuator&sensor)
- Obtained by **truncation**: we neglect translational velocities (u, v, w), and the yaw/heave dynamics
- Focus on lateral attitude

Reduced model (25 vs 58 states)

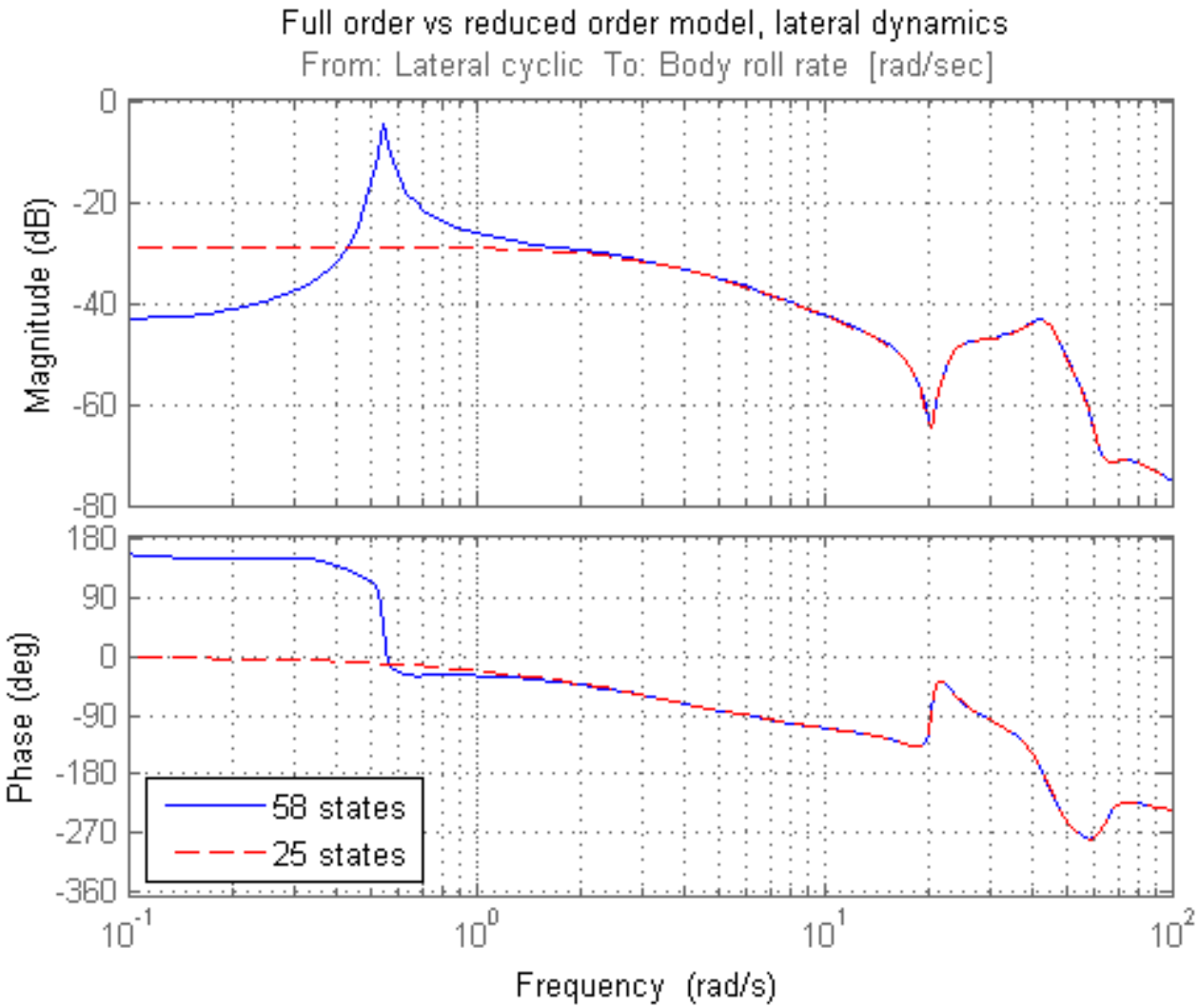

Modal decomposition

- Starting from the 25 states model, we obtain a reduced order model (**2 states**) which approximates the lateral attitude dynamics
- **Modal decomposition** of the 25 states model
- Retain only the most significant modal components

Modal decomposition: lateral attitude (magnitude)

Regressive flap (1&2)

Rotor-fuselage coupling

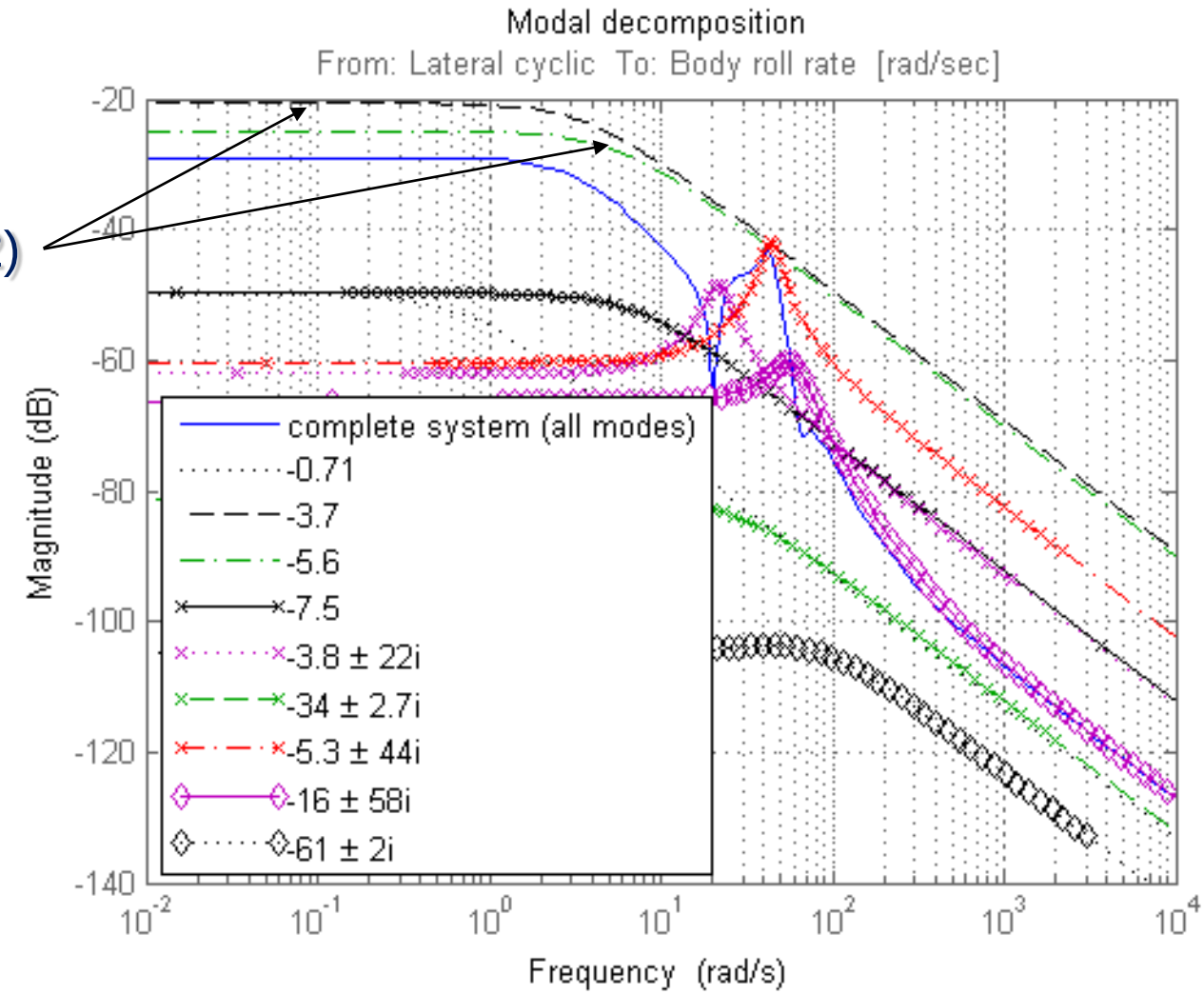

2 states model: lateral attitude

- Lateral attitude dynamics can be approximated by the only two regressive flap components (frequency response magnitude)
- In order to keep into account the phase delay due to actuators&sensors, an equivalent pure time delay has been estimated to be 71[ms] @ 10[rad/s]

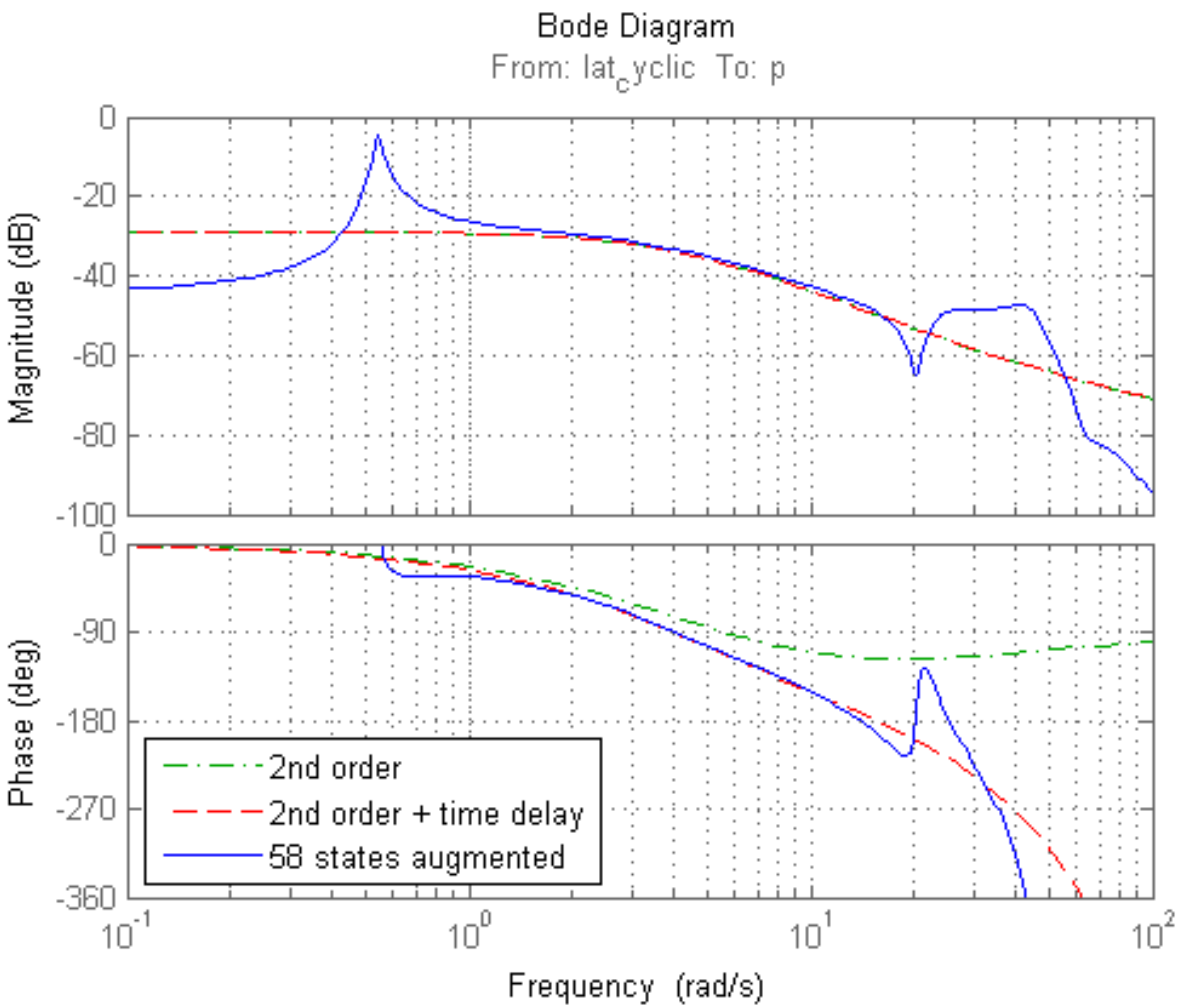

2 states model: lateral flap

- Also, the lateral flap (β_{1s}) frequency response is well approximated by the regressive flap mode (fitting routine) + equivalent time delay 23[ms]
- Non-minimum phase zero
- Ideal flap measurement (no sensor dynamics)

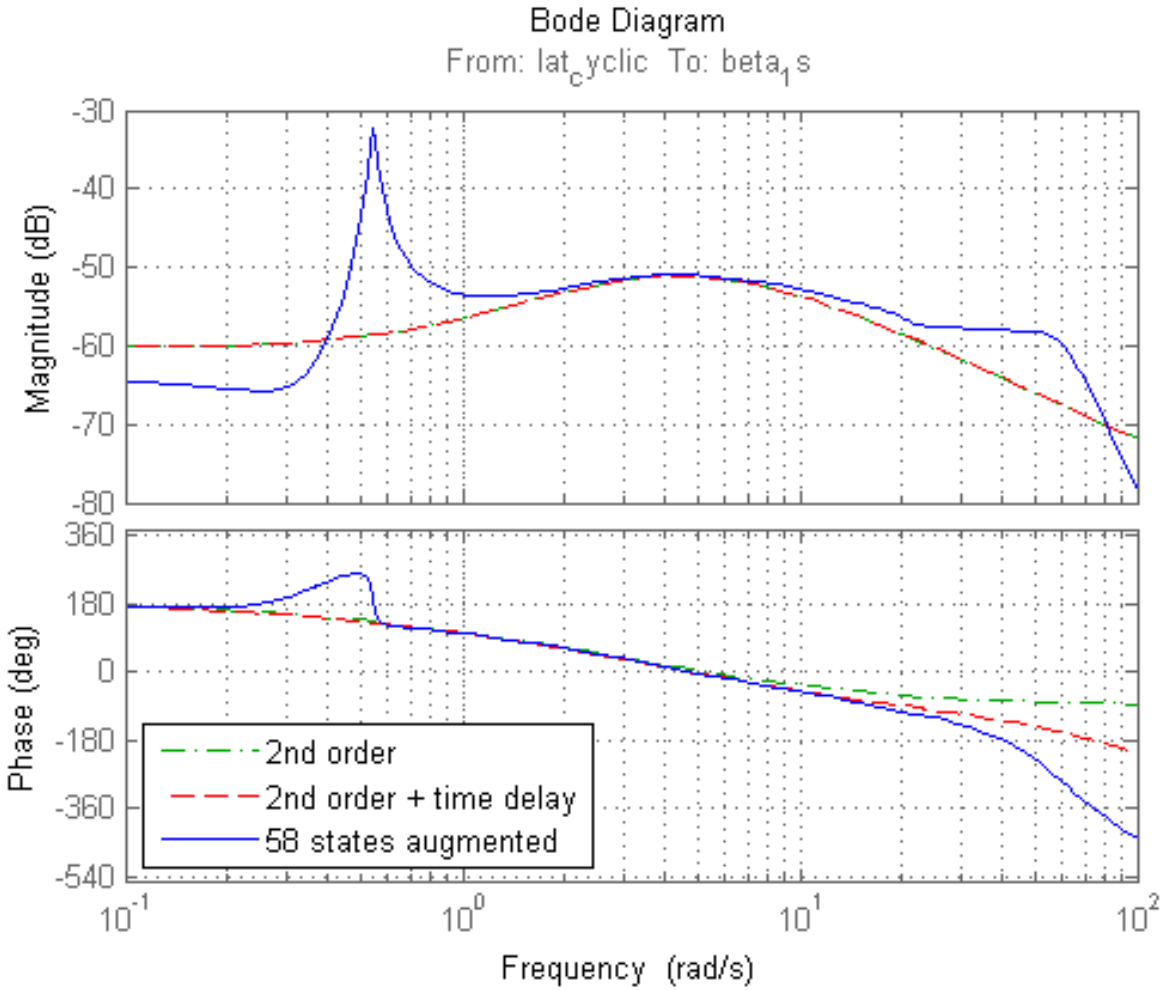

Control requirements

Objectives:

- Set-point tracking (attitude)
- External disturbances rejection (wind gusts)
- Inter-axes decoupling
- Alleviate pilot workload
- Dynamics of the response to pilot inputs (model reference)

ADS-33 spec

In addition:

- Robustness w/ respect to uncertainty
- Robustness w/ respect to sensor fault (fault tolerance)

Finally:

- FCS architecture is fixed

Flight control system architecture [Takahashi 1994]

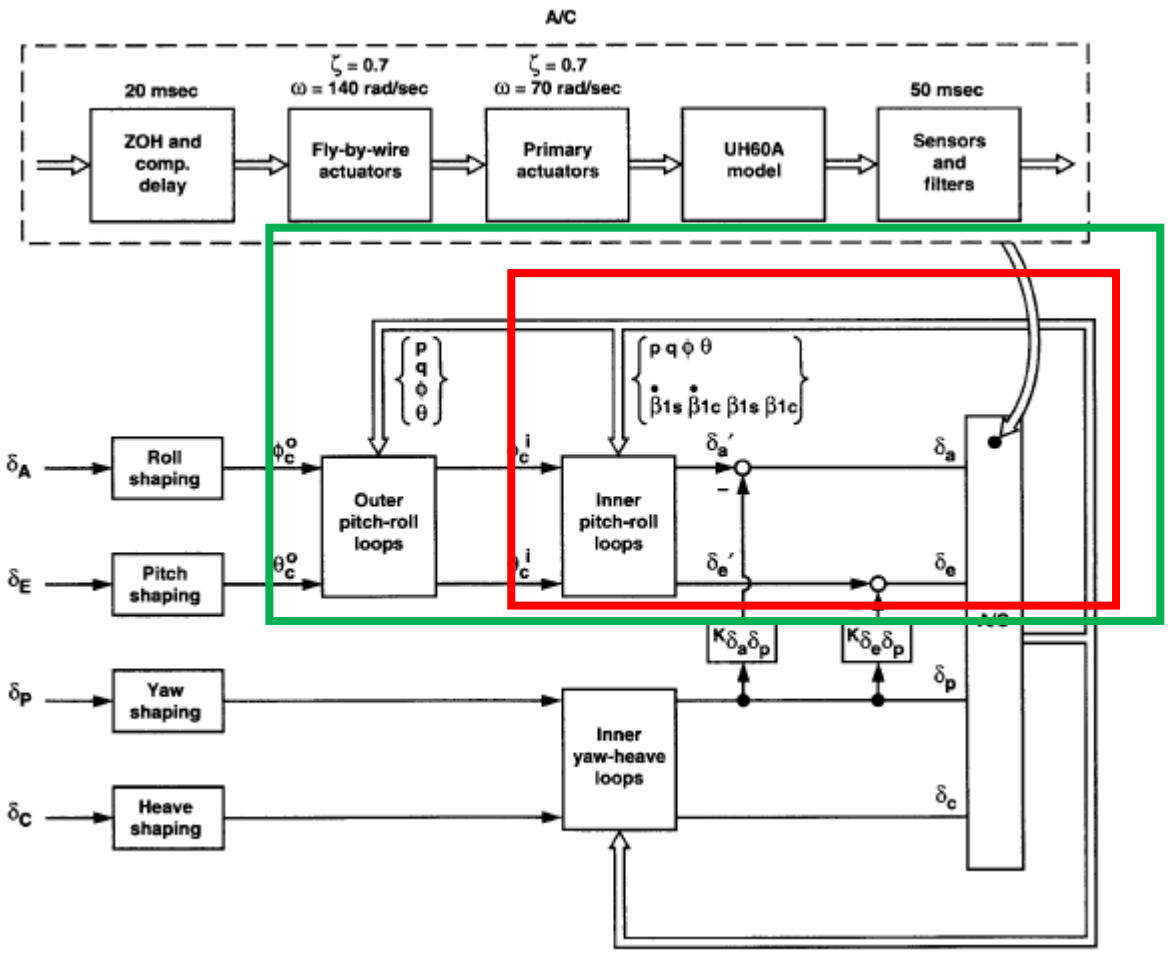

- Decoupling: pitch-roll and yaw-heave; focus on pitch-roll axes
- Inner loop: high bandwidth, rejection of high frequency disturbances → **static output gain**
- Outer loop: lower bandwidth, damp the low frequency fuselage modes, regulate the tracking error to zero → **PI**
- Fuselage-related measurements: IMU (attitude, rates, accelerations)

Rotor state feedback

- Low bandwidth: models are needed, which describe only fuselage dynamics, quasi-steady rotor
- To achieve high bandwidth implies incurring into a frequency range in which fuselage and rotor are dynamically coupled
- Using rotor state measurements in the feedback control law (RSF) gives access to rotor dynamics
- MBC measurements of flap (β_{1s}, β_{1c})

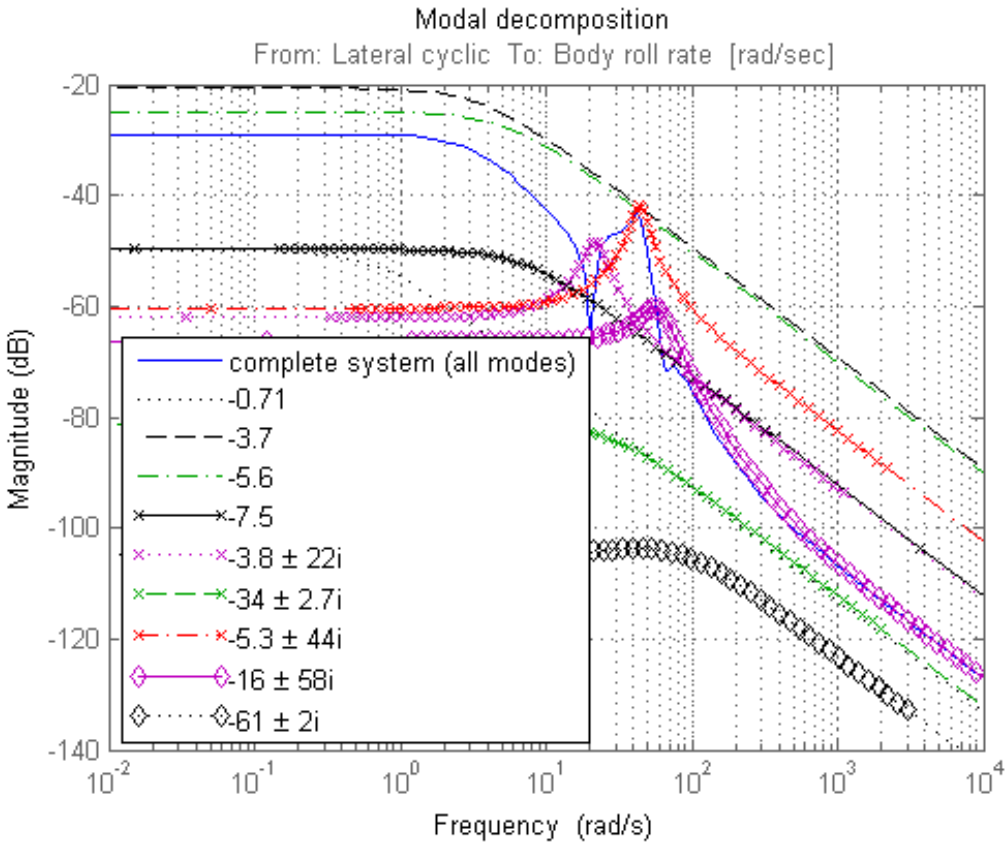

Control law structure: inner loop

- Attitude (inner) loop is a static gain matrix
- No decoupling between axes

Baseline (only fuselage measurements)

- Attitude (φ, θ)
- Attitude rate (p, q)

$$\delta_a = -\left(K_\varphi\left(\varphi - \varphi^0\right) + K_p p\right) \quad \text{(lateral)}$$

$$\delta_e = -\left(K_\theta\left(\theta - \theta^0\right) + K_q q\right) \quad \text{(longitudinal)}$$

RSF

- (same measurements as baseline)
- MBC flap (β_{1s}, β_{1c})

$$\delta_a = -\left(K_\varphi\left(\varphi - \varphi^0\right) + K_p p + K_{\beta_{1s}}\beta_{1s}\right)$$

$$\delta_e = -\left(K_\theta\left(\theta - \theta^0\right) + K_q q + K_{\beta_{1c}}\beta_{1c}\right)$$

H_∞ choice of weights: sensitivity (1)

Sensitivity function is associated to closed-loop performance:

- Disturbance rejection bandwidth (DRB)
- Peak in magnitude → damping ratio

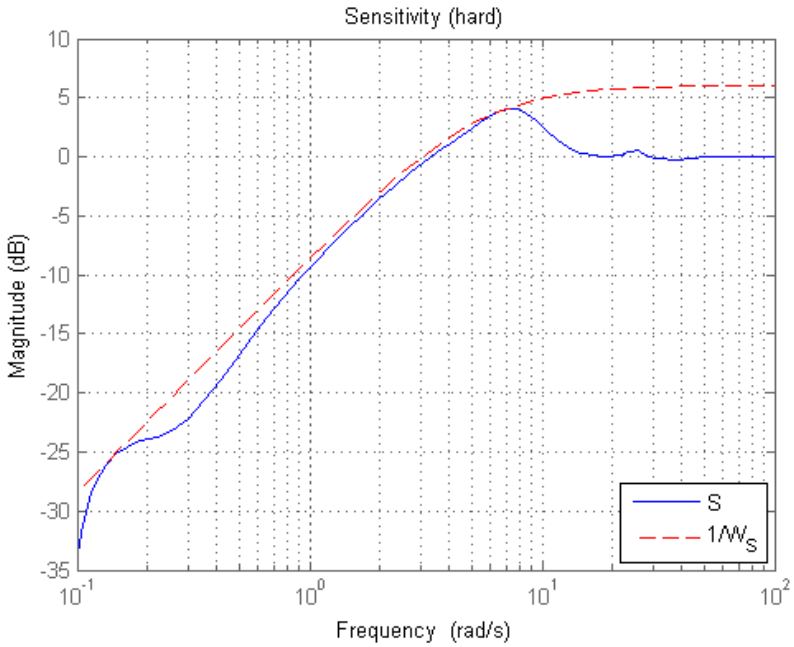

Attitude hold: the attitude angle shall return to its initial value as a response to external disturbance

Performance requirements → weight on the sensitivity function (*inverse of the weight can be interpreted as an upper bound on the sensitivity magnitude*)

$$S\varphi(s) = \frac{\varphi}{d_\varphi} \qquad \text{(SISO)}$$

$$W_S(s) = k_{HF}\frac{s+z}{s+p}$$

$$\max_\omega |S_\varphi(\jmath\omega)||W_S(\jmath\omega)| \leq 1$$

H_∞ choice of weights: sensitivity (2)

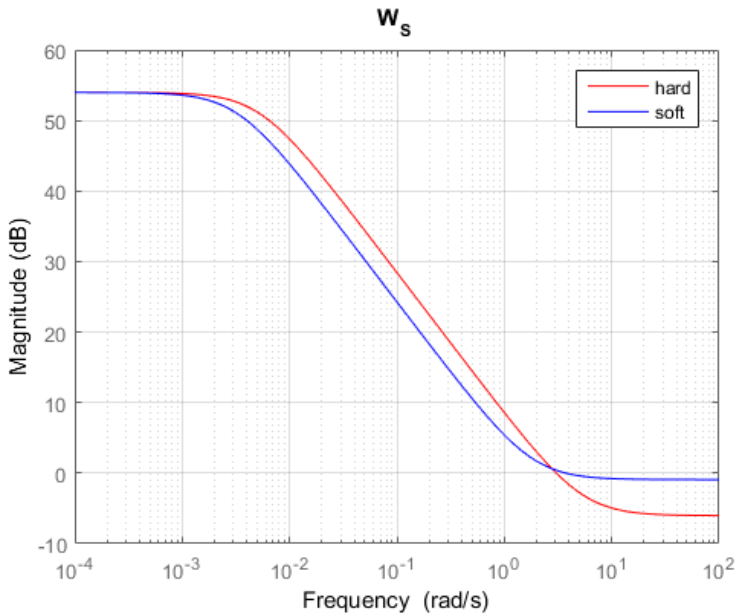

$$W_S(s) = k_{HF}\frac{s+z}{s+p}$$

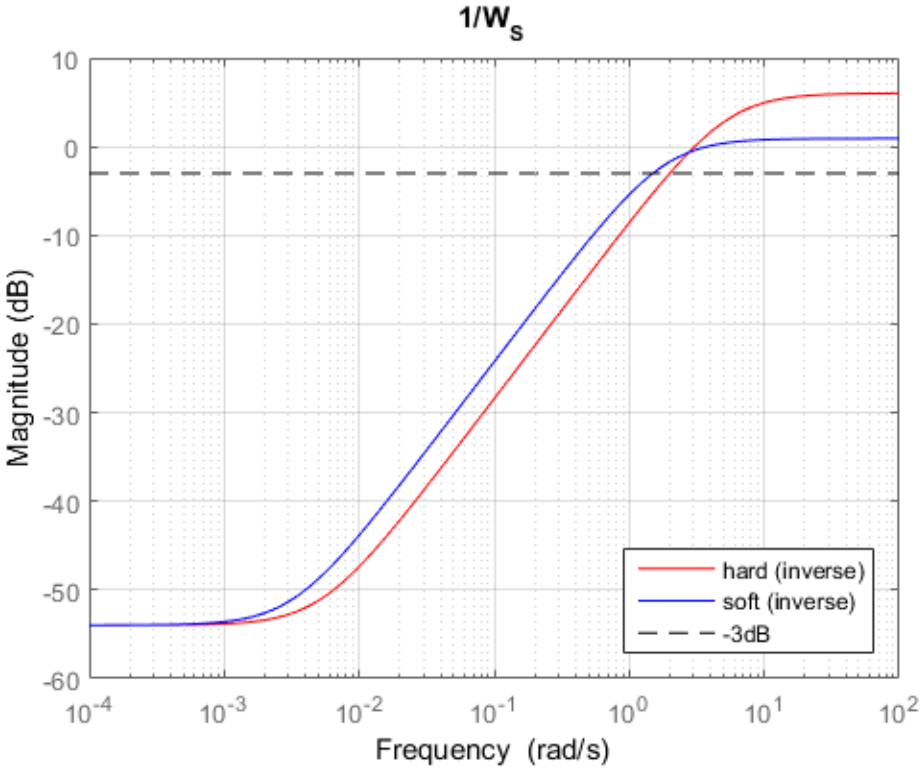

W_S parameters	Soft	Hard
Desired bandwidth [rad/s]	1.5	2
DC gain	500	500
High frequency gain	0.9	0.5

H_∞ choice of weights: control sensitivity

- Control sensitivity weight is necessary in order to limit control action (actuator range is bounded)
- Limit control action outside actuator bandwidth
- Control sensitivity can be interpreted as the tf from measurement noise to control action: it is important to bound control action as a response to high frequency noise
- Small gain at low frequency to avoid interferences with sensitivity

$$\max_{\omega} |R(j\omega)||W_R(j\omega)| \leq 1$$

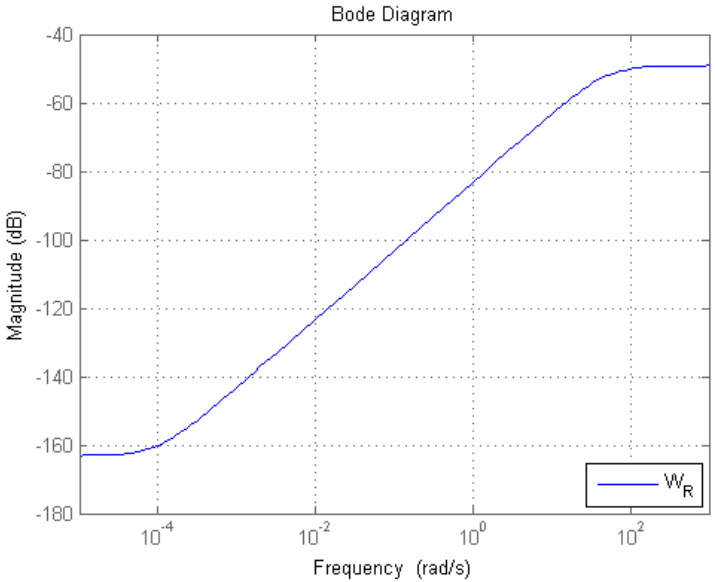

W_R parameters	Soft	Hard
High frequency gain	$3.5E-3$	$12E-3$
Pole frequency [rad/s]	50	50
Ratio high/low frequency gains	$5E5$	$5E5$

H_∞ choice of weights: complementary sensitivity

- Complementary sensitivity weight may be interpreted as a multiplicative uncertainty description $W_O(s)$

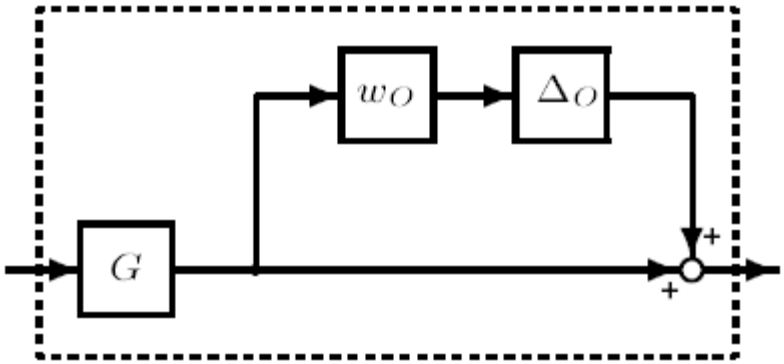

- Robust stability condition (w/respect to multiplicative uncertainty)

$$\|W_O(s)T(s)\|_\infty \leq 1 \qquad \|\Delta_O\|_\infty \leq 1$$

- … however, in this example no weight was imposed on complementary sensitivity in control law synthesis

H_∞ control requirements formulation

	Hard performance	Soft performance
Hard control moderation		RSF soft
Soft control moderation	RSF hard	Baseline

	$K_{\beta_{1s}} \frac{[\%]}{[rad]}$	$K_p \frac{[\%]}{[rad/s]}$	$K_\varphi \frac{[\%]}{[rad]}$
RSF hard	88	76	259
RSF soft	12	45	91
Baseline	0	65	119

Comparison bw controllers: step responses

Drift – unstable low frequency modes

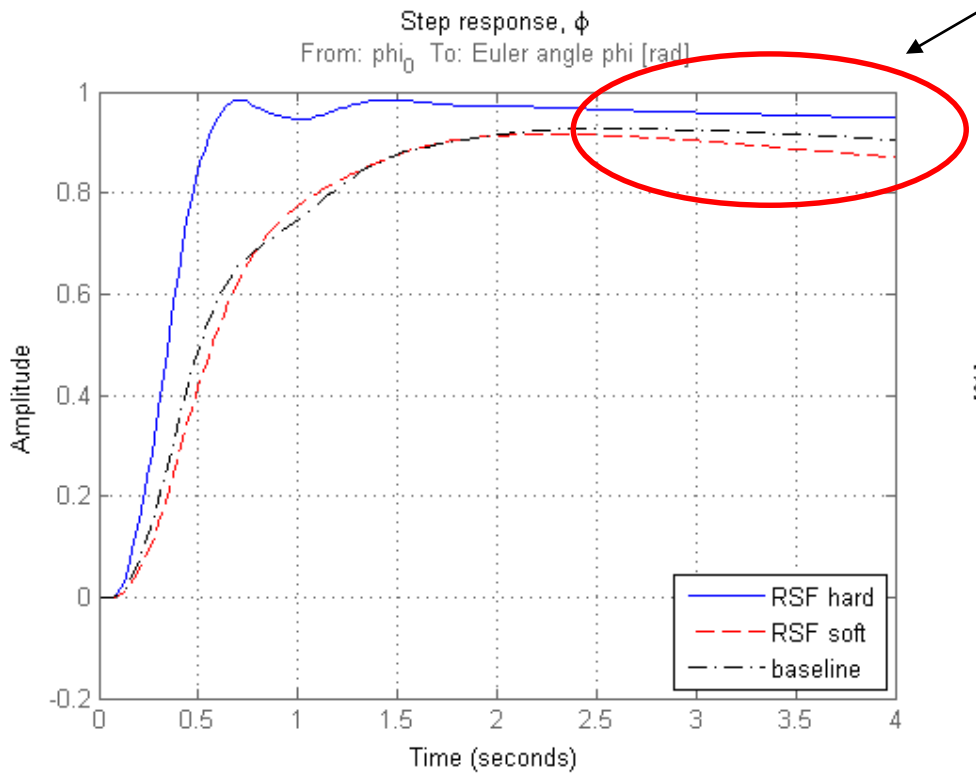

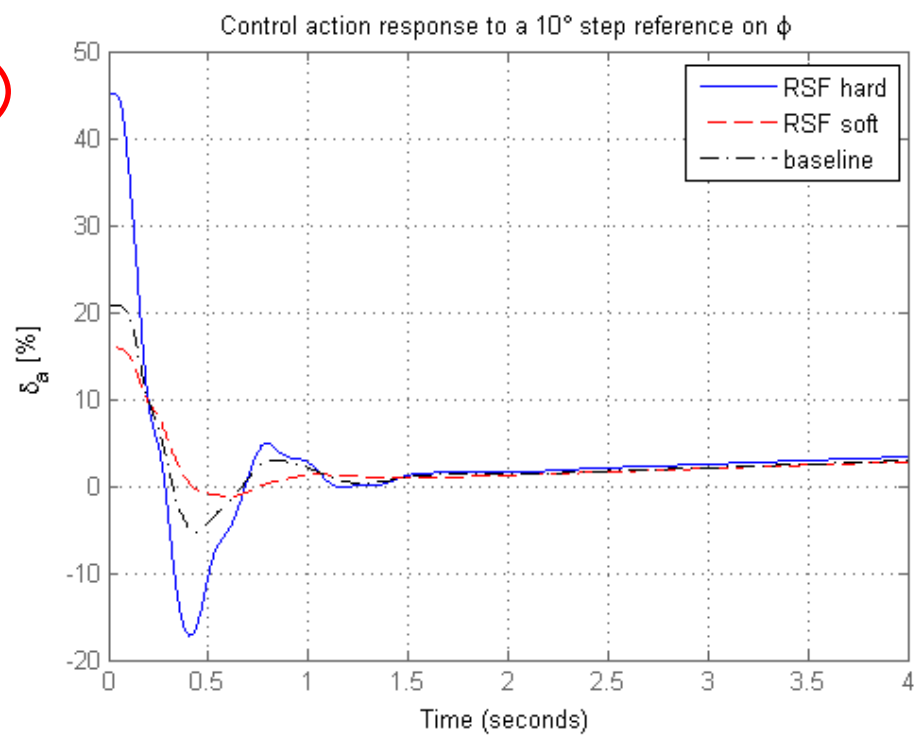

Parameters perturbations

- n models were generated ($n \sim 300$) by perturbing the parameter (mass, altitude, CG offset) values about the nominal value, in different combinations
- A **multiplicative uncertainty** description was then obtained, based on the nominal model
- Robustness analysis (a posteriori)

	Min	Max	Pace	Nominal
Mass [kg]	-	-	-	-
Altitude [ft]	-	-	-	-
CG_X [m]	-	-	-	-
CG_Y [m]	-	-	-	-
CG_Z [m]	-	-	-	-

$$V = \{0, 50, 90\}[kts]$$

Nominal vs perturbed models (lat cyclic to roll rate, hover)

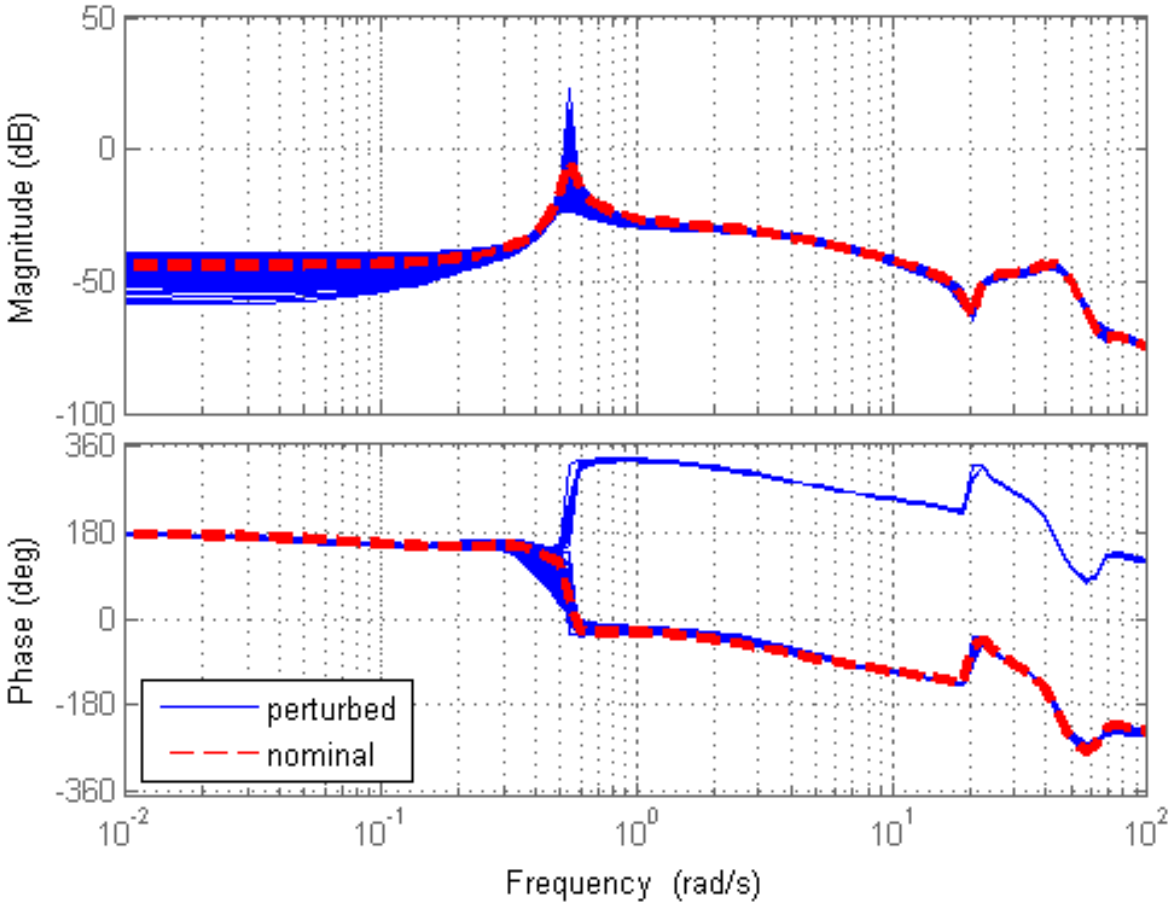

SISO multiplicative uncertainty description

1 input, 3 outputs:

$$u = \delta_a \qquad y = \begin{vmatrix} \beta_{1s} \\ p \\ \varphi \end{vmatrix} \qquad n_p = 3$$

SISO uncertainty description (one-channel at a time)

$$\tilde{G}_i = (1 + W_{O,i}(s)\Delta_i(s))G_i(s) \qquad i = 1..n_p$$

$$\|\Delta_i(s)\|_\infty \leq 1$$

SISO uncertainty description, hover (1)

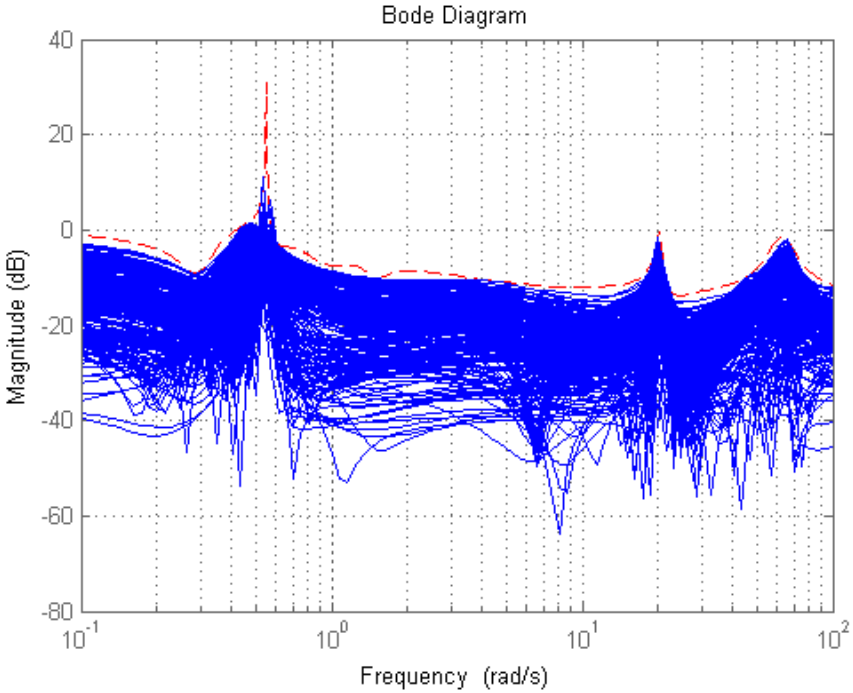

High peak at low frequency, due to lateral oscillation mode

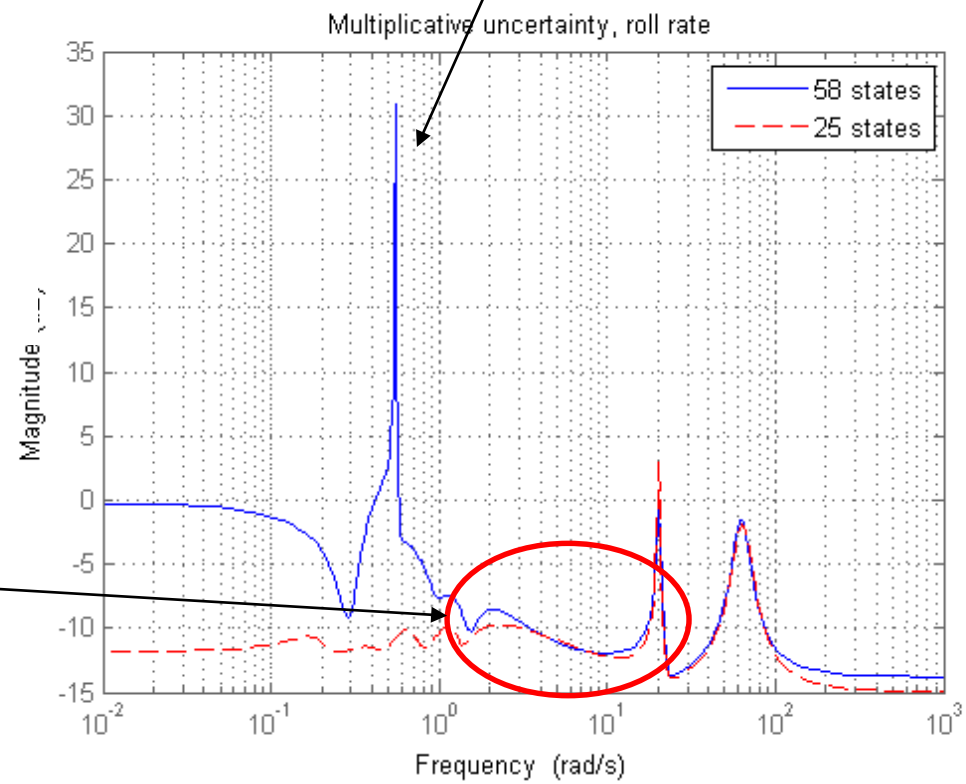

Low uncertainty (and good agreement) in the attitude dynamics frequency range

SISO uncertainty description, hover (2)

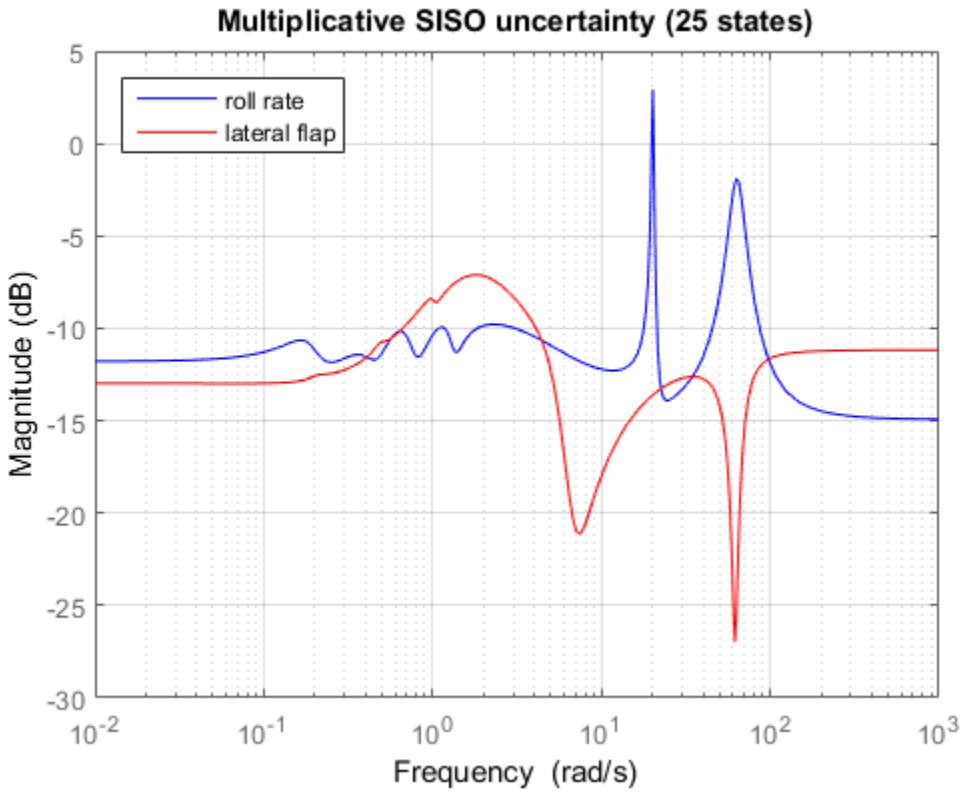

MIMO multiplicative uncertainty description (1)

SISO uncertainty description (one-channel at a time)

$$\tilde{G}_i = (1 + W_{O,i}(s)\Delta_i(s))G_i(s) \qquad i = 1..p \qquad\qquad \|\Delta_i(s)\|_\infty \leq 1$$

Stack weights into a diagonal matrix

$$W_O(s) = \begin{bmatrix} W_{O,1}(s) & 0 & 0 \\ 0 & W_{O,2}(s) & 0 \\ 0 & 0 & W_{O,3}(s) \end{bmatrix} \qquad\qquad y = \begin{vmatrix} \beta_{1s} \\ p \\ \varphi \end{vmatrix}$$

$$\tilde{G} = (I + \Delta_O(s)W_O(s))G(s)$$

$$[3 \times 3] \qquad [3 \times 3] \qquad [3 \times 1]$$

$$\|\Delta_O(s)\|_\infty \leq 1 \qquad\qquad \Delta_O = ?$$

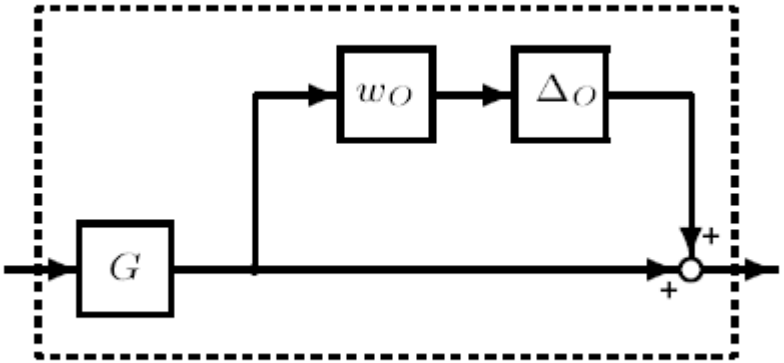

MIMO multiplicative uncertainty description (2)

$$W_O(s) = \begin{bmatrix} W_{O,1}(s) & 0 & 0 \\ 0 & W_{O,2}(s) & 0 \\ 0 & 0 & W_{O,3}(s) \end{bmatrix}$$

Diagonal (structured) delta

$$\Delta_D(s) = \begin{bmatrix} \Delta_1(s) & 0 & 0 \\ 0 & \Delta_2(s) & 0 \\ 0 & 0 & \Delta_3(s) \end{bmatrix}$$

$$\|\Delta_i(s)\|_\infty \leq 1$$

$$\tilde{G}_D = (I + \Delta_D(s) W_O(s)) G(s)$$

VS

Full-block (unstructured) delta

$$\Delta(s) = \begin{bmatrix} \Delta_{11}(s) & \Delta_{12}(s) & \Delta_{13}(s) \\ \Delta_{21}(s) & \Delta_{22}(s) & \Delta_{23}(s) \\ \Delta_{31}(s) & \Delta_{32}(s) & \Delta_{33}(s) \end{bmatrix}$$

$$\|\Delta(s)\|_\infty \leq 1$$

$$\tilde{G} = (I + \Delta(s) W_O(s)) G(s)$$

Full-diagonal uncertainty→introduce conservatism

A posteriori robustness analysis: frequency domain (hover)

- Robust stability condition (w/respect to multiplicative uncertainty) is checked *a posteriori* on the system closed in loop with the regulator obtained by means of H-inf synthesis:

$$\|W_O(s)T(s)\|_\infty < 1$$

$$T(s) = G(s)K(s)\left(I + G(s)K(s)\right)^{-1}$$

- MIMO complementary sensitivity (based on non-robust control law synthesis) was weighted with uncertainty description
- Largest singular value plot shows that the peak remains under 0dB (or low in any case)

$$\bar{\sigma}\left(W_O(\jmath\omega)T(\jmath\omega)\right)$$

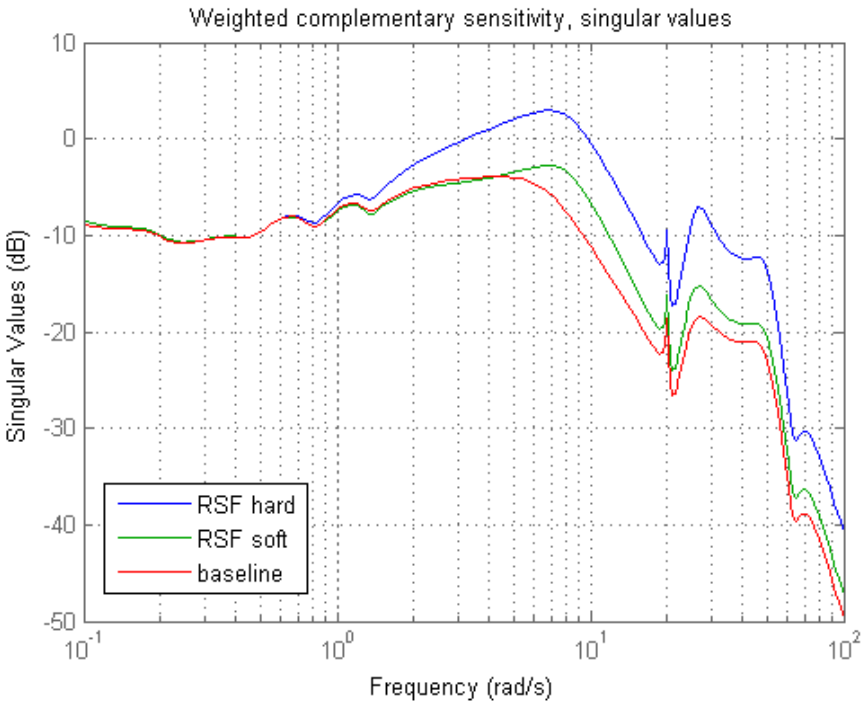

Uncertainty description, hover+forward flight

- Analysis was extended to the case of forward flight $V = \{0, 50, 90\}[kts]$
- Uncertainty is larger (being the set of perturbed models larger)
- No robustness issues were detected as for the attitude control loop

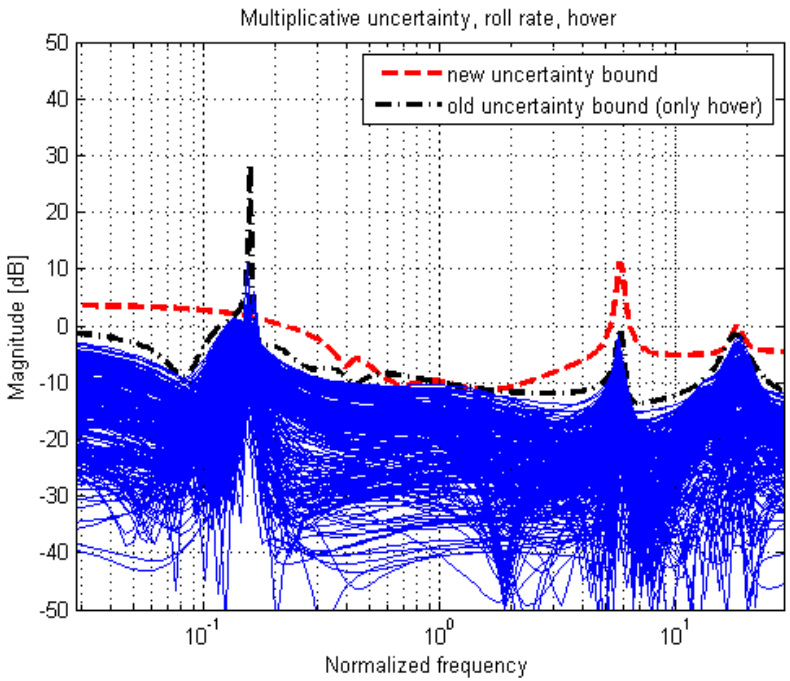

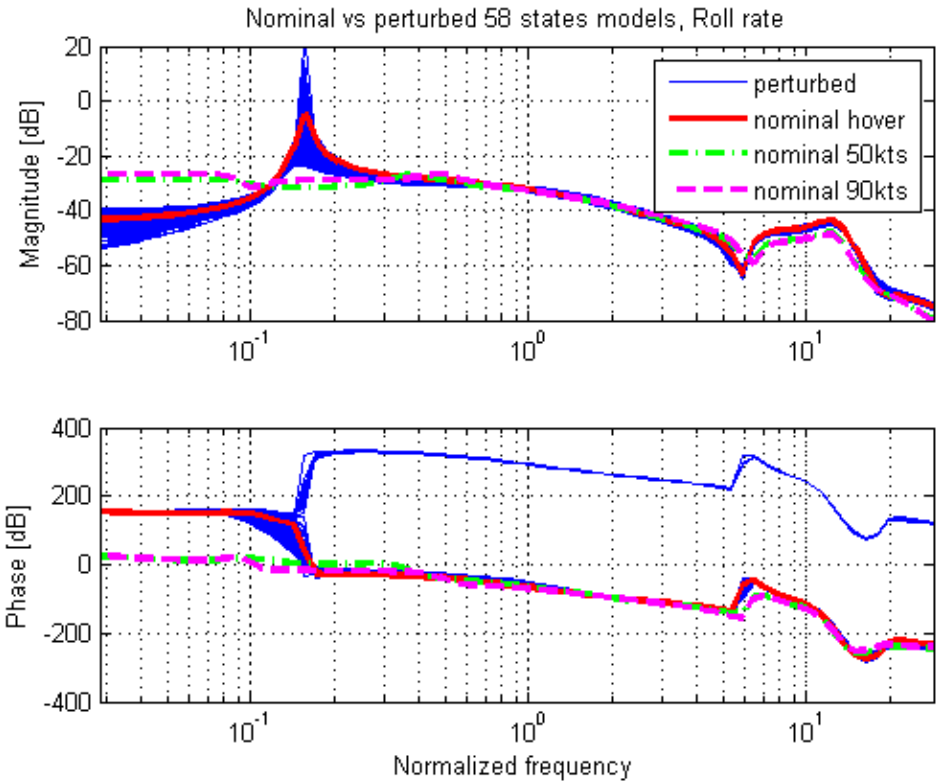

A posteriori robustness analysis: frequency domain (hover + forward flight)

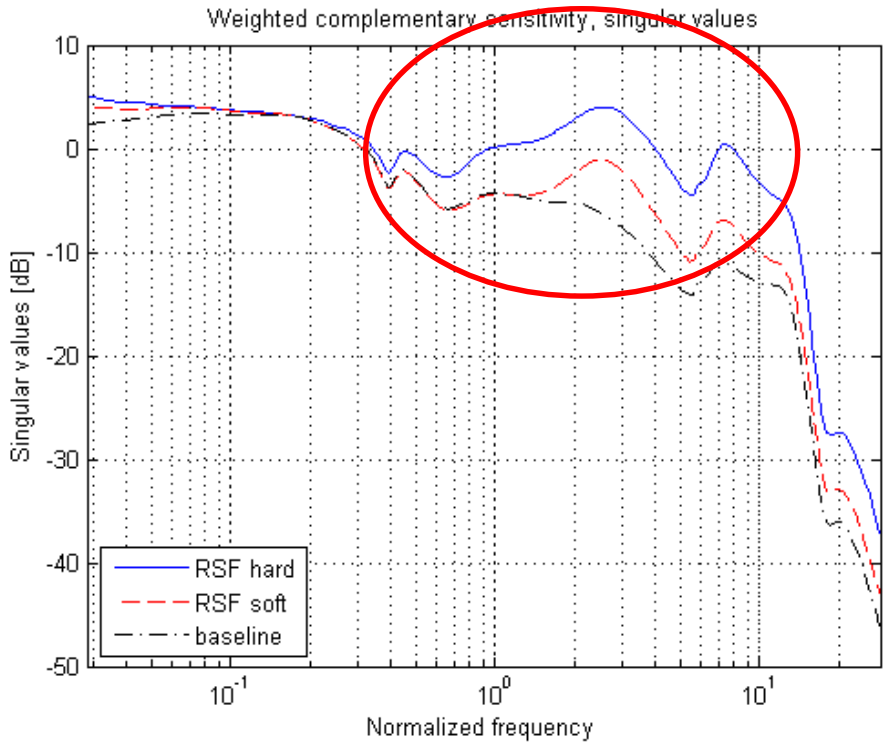

$$\bar{\sigma}\left(W_O(\jmath\omega)T(\jmath\omega)\right)$$

A posteriori robustness analysis: time domain (hover + forward flight)

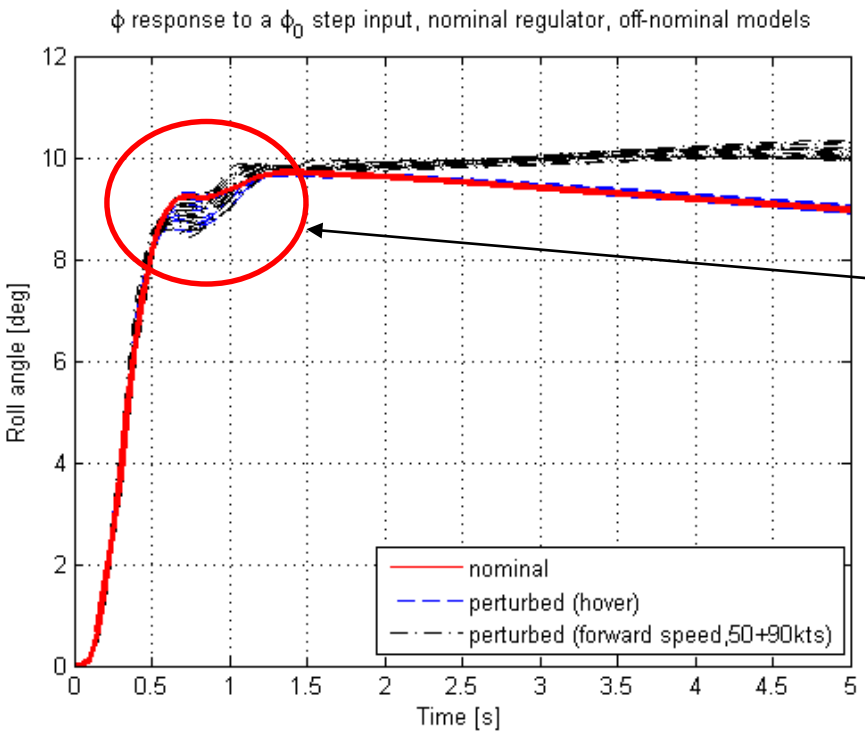

Step response, roll angle (RSF hard, hover)

Variability in time response due to mass perturbations

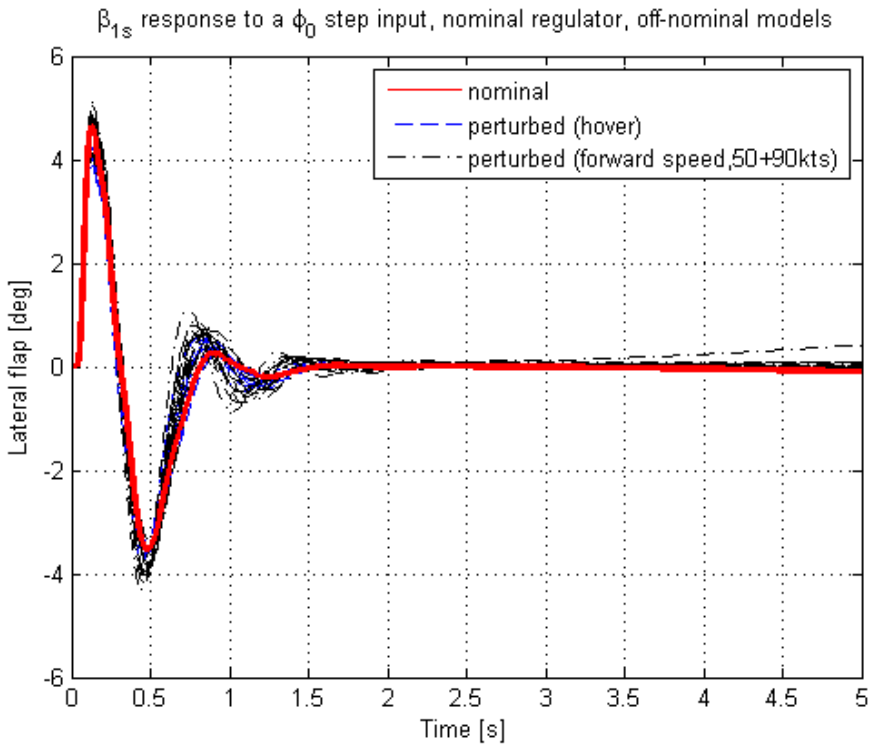

Step response, lateral flap (RSF hard, hover)

Acknowledgements

This work was developed in the framework of project MANOEUVRES

MANOEUVRES “Manoeuvring Noise Evaluation Using Validated Rotor State Estimation Systems”
is a project funded by the Clean Sky Joint Undertaking within the framework of Green Rotorcraft of the Clean Sky JTI

http://www.manoeuvres.eu

Application case #2
Multivariable tilt-rotor attitude control

Tilt-rotor control strategy (hover)

Control on the 4 axes: modulate thrust on the 2 rotors

- common
- differential

Mixing matrix

$$\begin{bmatrix} \theta_{0,L} \\ \theta_{0,R} \\ \theta_{1s,L} \\ \theta_{1s,R} \end{bmatrix} = \begin{bmatrix} 1 & 1 & 0 & 0 \\ 1 & -1 & 0 & 0 \\ 0 & 0 & 1 & -1 \\ 0 & 0 & 1 & 1 \end{bmatrix} \begin{bmatrix} \theta_{0,C} \\ \theta_{0,D} \\ \theta_{1s,C} \\ \theta_{1s,D} \end{bmatrix}$$

Rotor commands (swashplate commands of L/R rotors)

Pilot commands

No lateral cyclic

Heave velocity w
Common collective $\theta_{0,C}$

Roll angle φ
Differential collective $\theta_{0,D}$

Pitch angle θ
Common longitudinal cyclic $\theta_{1s,C}$

Yaw rate r
Differential longitudinal cyclic $\theta_{1s,D}$

Modeling – bare airframe model

XV-15 linearized 32 states model in hover

- Generated by MASST
- Fully coupled (6 axes)

Body dynamics

- Attitude angles & rates
- Linear speeds and displacements

Rotor dynamics

- (gimbal) MBC flap angles
- MBC blade pitch angles

Inputs: 6(=3x2) rotor commands→ 4 pilot commands

+ actuator/sensor dynamics

+ time delay (signal processing)

Mode	Eigenvalue [rad/s]
Blade pitch progressive (x2)	$-15.70 \pm 251.97j$
Blade pitch collective (x2)	$-15.59 \pm 205.06j$
Blade pitch regressive (x2)	$-15.70 \pm 126.10j$
Flap progressive (x2)	$-17.87 \pm 120.20j$
Flap regressive (x2)	$-17.62 \pm 5.72j$
Roll subsidence (RS)	-1.05
Longitudinal phugoid (LP)	$+0.18 \pm 0.434j$
Pitch subsidence (PS)	-0.609
Vertical displacement (VD)	-0.470
Lateral displacement (LD)	-0.0635
Dutch roll (DR)	$+0.0187 \pm 0.153j$

Modeling – model order reduction

Frequency range of interest:

[0.1, 10][rad/s]

Multi-stage model order reduction

1. Residualization of fast rotor states (blade pitch dynamics)
2. Model reduction driven by modal decomposition

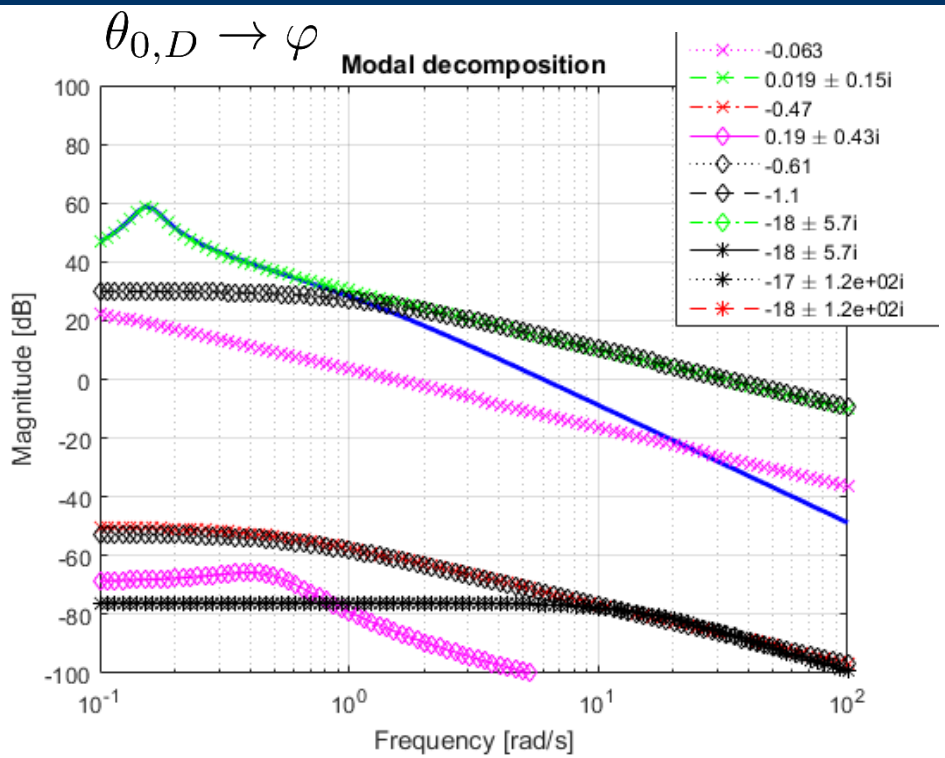

Four-axes fully coupled model → 2 two-axes models*

Roll-Yaw	Pitch-Heave
RS (-1.05)	PS (-0.609)
LD (-0.0635)	VD (-0.470)
DR $(+0.0187 \pm 0.153\jmath)$	LP $(+0.18 \pm 0.434\jmath)$

*an alternative version of the model contains the regressive flap mode, in addition to those listed in table

Modeling – actuator and sensor dynamics

Actuator and sensor dynamics were cascaded to the model

- Actuators: first order models, one for each input
- Sensors (sampling frequency 100Hz):
  - Angle: first order
  - Angular rate: second order
- Time delay (signal processing)

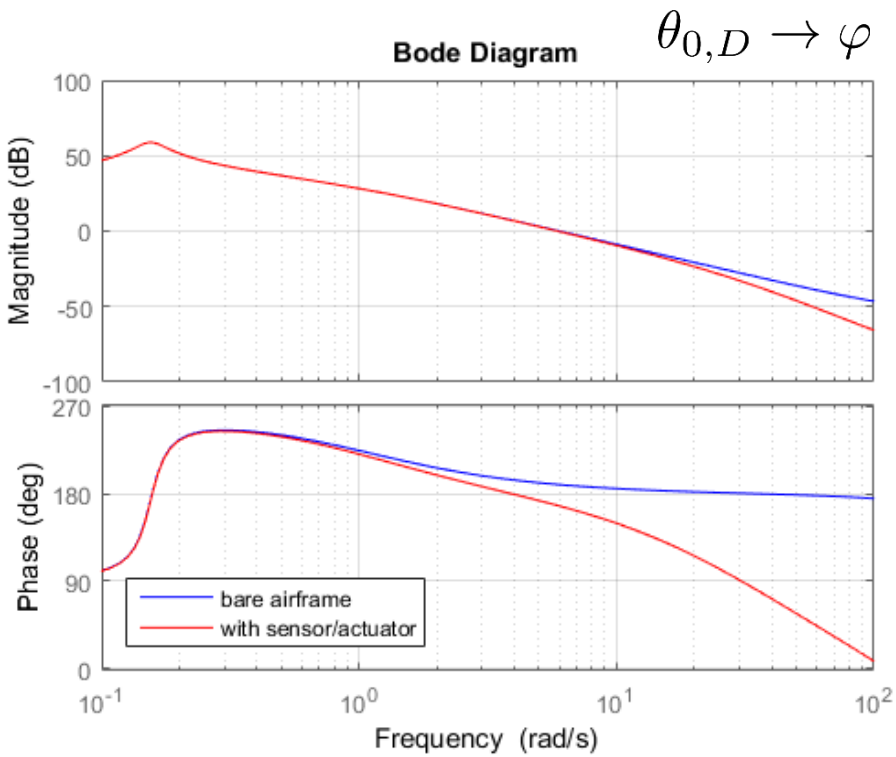

Name	Order	Bandwidth [Hz]	Delay [ms]
Actuator	1	4	0
Sensor (angle)	1	8	5
Sensor (rate, velocity)	2	8	5

Attitude control loop design – requirements & measurements

AFCS must accomplish requirements of:

- Stabilization
- Performance (disturbance rejection)
- Control action moderation (SCAS authority is limited)
- Safety

Subject to

- Constraints on the control law architecture

No standard document for tilt-rotor handling qualities specification…

Inspiration was taken from ADS-33

Measurements available:

- IMU
  - Angular rates p, q, r
  - Attitude angles φ, θ, ψ
  - Linear speeds u, v, w
- Rotor (L/R)
  - Longitudinal flap $\beta_{1c,L}, \beta_{1c,R}$

(related to pitch/yaw dynamics)

Fundamental trade-off between performance and safety

Attitude control loop design – control law architecture (lateral-directional)

2 classes of control law architectures:

- Baseline: only fuselage measurements $K_\beta = 0$
- RSF: fuselage + rotor measurements $K_\beta \neq 0$

$$\begin{bmatrix} \theta_{0,D} \\ \theta_{1s,D} \end{bmatrix}_{fuselage} = \begin{bmatrix} K_\varphi & K_p & 0 \\ 0 & 0 & K_r \end{bmatrix} \begin{bmatrix} e_\varphi \\ e_p \\ e_r \end{bmatrix}$$

$$\begin{bmatrix} \theta_{1s,L} \\ \theta_{1s,R} \end{bmatrix}_{rotor} = -\begin{bmatrix} K_\beta & 0 \\ 0 & K_\beta \end{bmatrix} \begin{bmatrix} \beta_{1c,L} \\ \beta_{1c,R} \end{bmatrix}$$

$$\begin{bmatrix} \theta_{0,L} \\ \theta_{0,R} \\ \theta_{1s,L} \\ \theta_{1s,R} \end{bmatrix} = \left[\begin{array}{ccc|cc} K_\varphi & K_p & 0 & 0 & 0 \\ -K_\varphi & -K_p & 0 & 0 & 0 \\ 0 & 0 & -K_r & K_\beta & 0 \\ 0 & 0 & K_r & 0 & K_\beta \end{array}\right] \begin{bmatrix} e_\varphi \\ e_p \\ e_r \\ -\beta_{1c,L} \\ -\beta_{1c,R} \end{bmatrix}$$

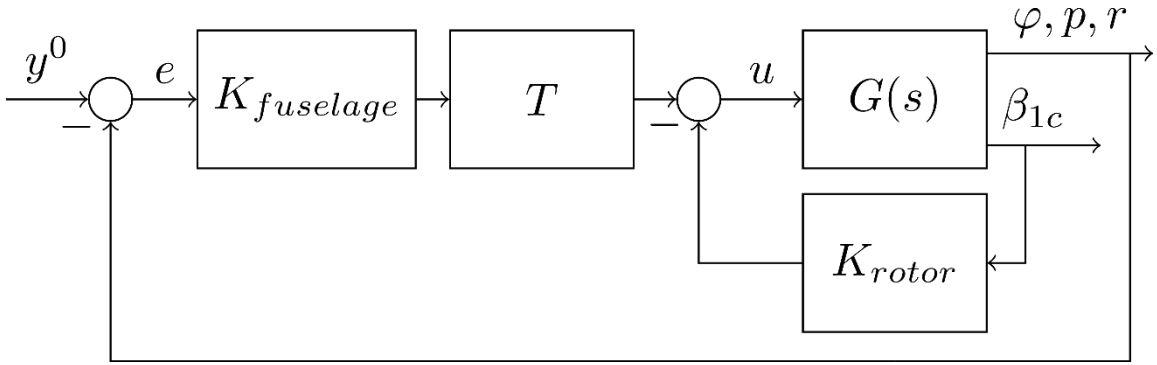

Formulation of the control problem in the H_∞ framework: choice of weights

Weights are first order

- DC gain
- HF gain
- Bandwidth/crossover frequency

$$\begin{bmatrix} \varphi \\ p \\ r \end{bmatrix} = S(s) \begin{bmatrix} d_\varphi \\ d_p \\ d_r \end{bmatrix}$$

$$S_\varphi(s) = \frac{\varphi}{d_\varphi}$$

$$S_r(s) = \frac{r}{d_r}$$

$$\max_\omega |S_i(\jmath\omega)||W_{S,i}(\jmath\omega)| \leq 1$$

$$i = \{\varphi, r\}$$

Inverse of weight → upper bound on magnitude

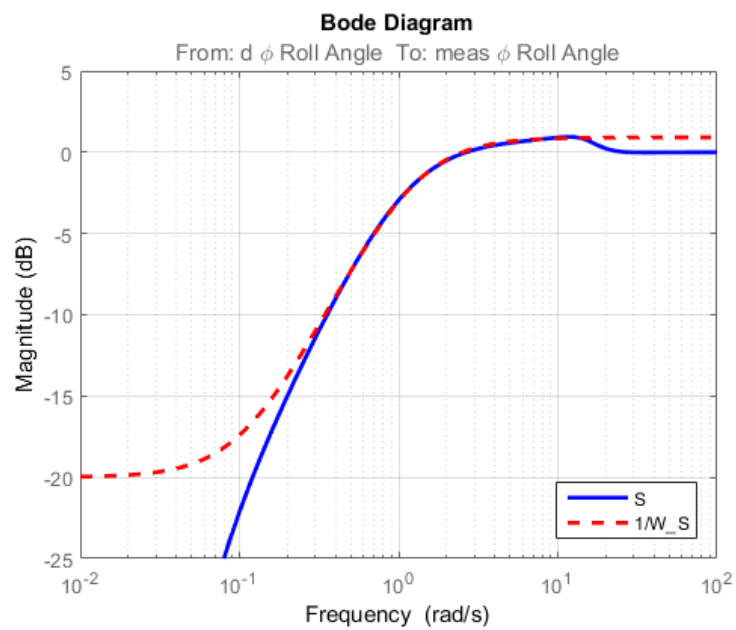

Weights on (SISO) components of

- Sensitivity
- Control sensitivity
- TF from θ^0, r^0 to $\beta_{1c,L}, \beta_{1c,R}$

Formulation of the control problem in the H_∞ framework: performance weights

Sensitivity function is associated to closed-loop performance:

- Bandwidth → disturbance rejection
- Peak in magnitude → damping ratio

$$\begin{bmatrix} \varphi \\ p \\ r \end{bmatrix} = S(s) \begin{bmatrix} d_\varphi \\ d_p \\ d_r \end{bmatrix}$$

$$S_\varphi(s) = \frac{\varphi}{d_\varphi} \qquad S_r(s) = \frac{r}{d_r}$$

Disturbance rejection bandwidth (DRB): -3[dB] bandwidth of the (SISO) sensitivity function

$$\max_\omega |S_i(\jmath\omega)||W_{S,i}(\jmath\omega)| \leq 1$$

Inverse of the (order 1) weight can be interpreted as an upper bound on the sensitivity magnitude

- DC gain
- HF gain
- bandwidth

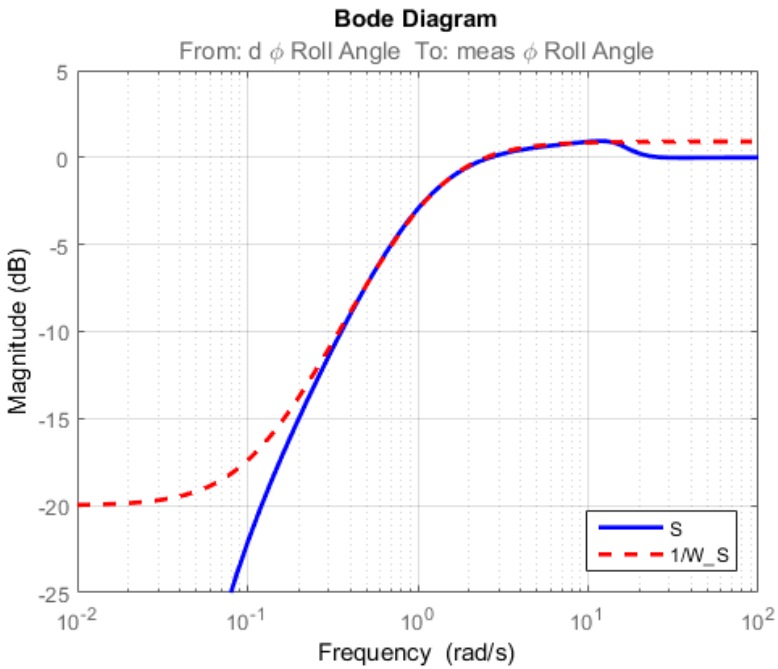

Formulation of the control problem in the H_∞ framework: control moderation weights

Control action needs to be limited:

- actuator range is limited
- outside actuator bandwidth
- as a response to high frequency noise (control sensitivity is the TF from measurement noise to control action)

$$\begin{bmatrix} \theta_{0,D} \\ \theta_{1s,D} \end{bmatrix} = R(s) \begin{bmatrix} \varphi^0 \\ r^0 \end{bmatrix}$$

$$R_\varphi(s) = \frac{\theta_{0,D}}{\varphi^0} \qquad R_r(s) = \frac{\theta_{1s,D}}{r^0}$$

- Small weight at low frequency to avoid interferences with sensitivity function
- Large weight at high frequency
- HF cut @ actuator's bandwidth

$$\max_\omega |R_i(\jmath\omega)||W_{R,i}(\jmath\omega)| \leq 1$$

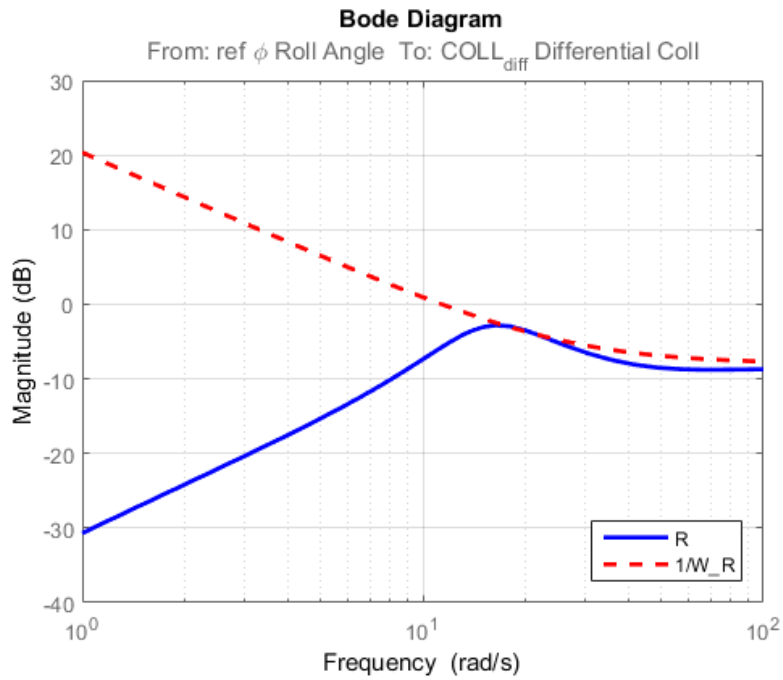

Formulation of the control problem in the H_∞ framework: safety weights

Limit out-of-plane blade motion

$$W_{\beta,\theta}(s) = 1$$

Longitudinal flap is associated to motion about pitch and yaw axes

$$W_{\beta,r}(s) = 0$$

Weight on

$$\begin{bmatrix} \beta_{1c,L} \\ \beta_{1c,R} \end{bmatrix} = T_\beta(s) \begin{bmatrix} \theta^0 \\ r^0 \end{bmatrix}$$

$$\max_\omega |T_{\beta L,i}(\jmath\omega)||W_{\beta,i}(\jmath\omega)| \leq 1$$

$$\max_\omega |T_{\beta R,i}(\jmath\omega)||W_{\beta,i}(\jmath\omega)| \leq 1$$

Trade-off between performance and safety

In the frequency range interested by yaw (pitch) attitude control, flap dynamics can be regarded as at steady state

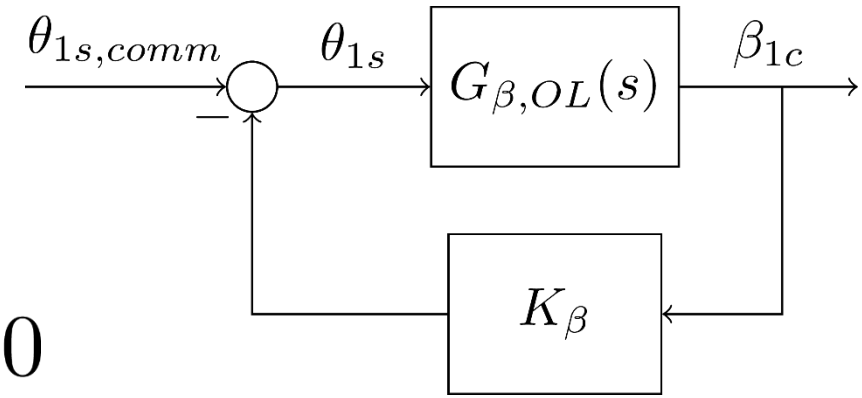

$$G_{\beta,OL}(s) \simeq -1 \qquad K_\beta < 0$$

$$\frac{\beta_{1c}}{\theta_{1s,comm}} = \frac{G_{\beta,OL}(s)}{1 + K_\beta G_{\beta,OL}(s)} \simeq \frac{-1}{1 - K_\beta} = G_{\beta,RSF}(s)$$

Reduction of $\left| \frac{-1}{1 - K_\beta} \right|$ results in reduced yaw (pitch) moment

→ reduced performance in the yaw (pitch) channel

Control law synthesis - results

3 control laws

- Baseline: only fuselage measurements $K_\beta = 0$
- RSF $K_\beta \neq 0$
- RSF - 2 step procedure:
  1. Close the loop on baseline gains
  2. Tune K_β
  - Sub-optimal
  - Can be implemented on top of existing attitude control law

Table 1: Tunable parameters (T=tunable, F=fixed).

	baseline	*RSF*	RSF_{2S}
K_φ	T	T	T (step 1)
K_p	T	T	T (step 1)
K_r	T	T	T (step 1)
K_θ	T	T	T (step 1)
K_q	T	T	T (step 1)
K_w	T	T	T (step 1)
K_β	F $(=0)$	T	T (step 2)

	Performance	Control moderation	Safety
Baseline	X	X	
RSF	X	X	X
RSF 2 step	X	X	X

Simulation results: step responses (pitch/yaw)

Step responses

- Small amplitude (linear model)
- Reasonable control action

Reference signal	Step amplitude
w^0	$-1[m/s]$
φ^0	$5[deg]$
θ^0	$5[deg]$
r^0	$10[deg/s]$

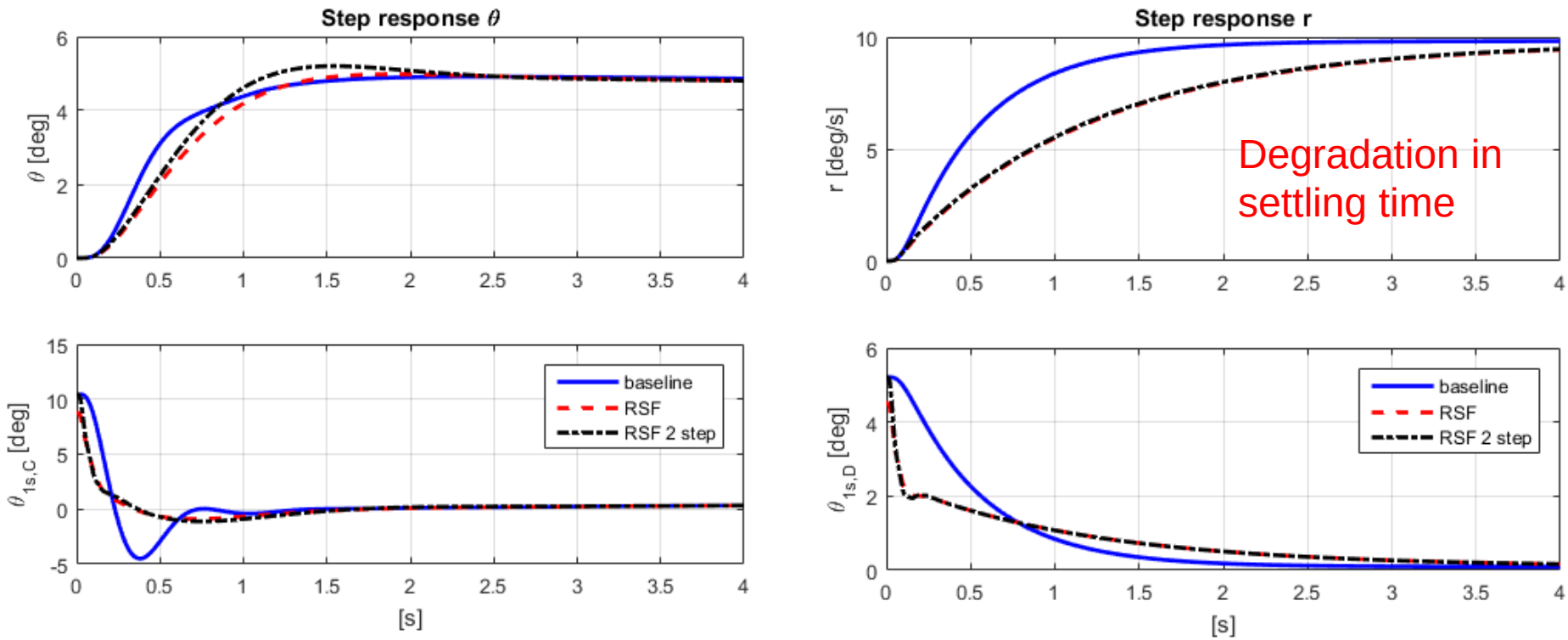

Simulation results – flap response

$$\left\| T_{\beta(L,R),i}(s) \right\|_\infty$$

$$i = \{\theta^0, r^0\}$$

	$baseline$	RSF	RSF_{2S}
Pitch	3.7603	1.2591 (-67%)	1.2959 (-66%)
Yaw	0.5620	0.2598 (-54%)	0.2699 (-52%)

Reduction of the amount of flapping

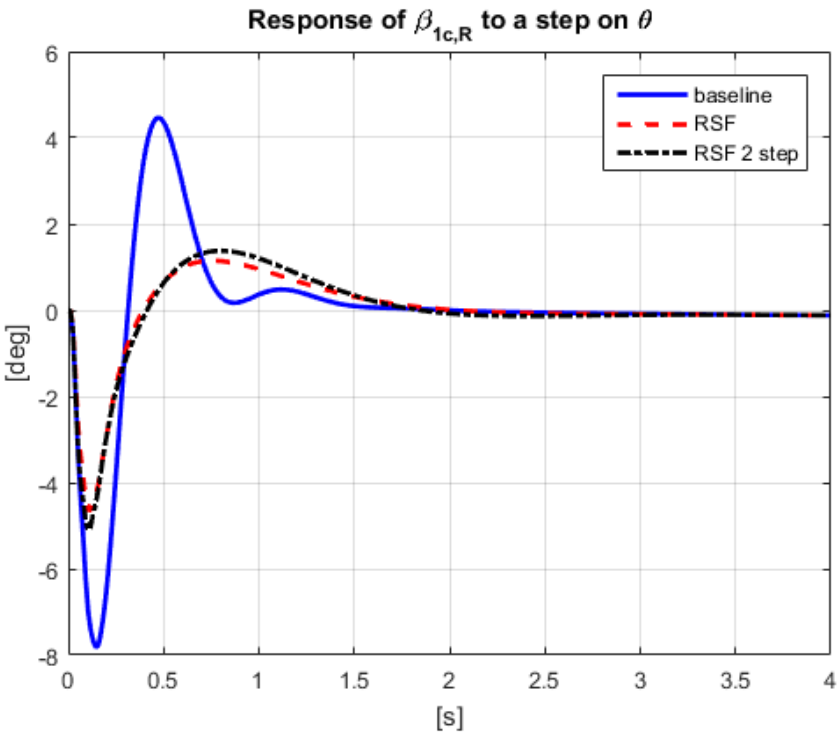

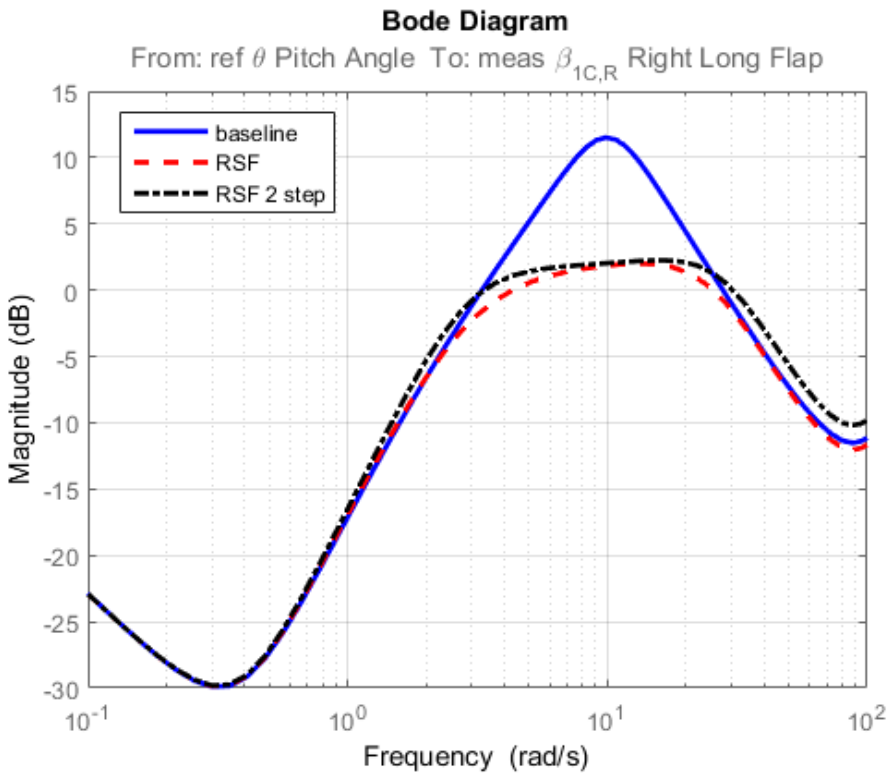

Conclusions (1)

Optimization-based methodology for the tuning of rotorcraft attitude control laws

- Multivariable
- Structured
- Based on $\boldsymbol{H}_\infty$ framework
- Multiple requirements → multi-objective optimization problem
  - Performance (bandwidth)
  - Control action moderation
  - Safety
  - Robustness to uncertainty

Choice of frequency weights can be time-consuming…

Conclusions (2)

RSF allows to address requirements of:

- Safety
- Performance

- A trade-off shows up between performance vs safety
- Overcome intrinsic trade-off of classical control laws (bandwidth vs damping ratio)

Practical issues: a flap sensor is to be mounted on each of the blades (to compute MBC transformation)

- Heavy
- Expensive
- Space in the rotor head is limited…

THANK YOU

FOR YOUR ATTENTION

References (1)

Helicopter history and modeling:

- G.J. Leishman (2006), *Principles of helicopter aerodynamics (2nd edition),* Cambridge University Press.
- G.D. Padfield (2007), *Helicopter flight dynamics : the theory and application of flying qualities and simulation modelling*, Blackwell.
- A.R.S. Bramwell, D. Balmford and G. Done (2001), *Bramwell's Helicopter Dynamics*, Elsevier Butterworth-Heinemann.

Standard specification:

- (2000), *ADS-33E-PRF, Aeronautical Design Standard, Performance Specification. Handling Qualities Requirements for Military Rotorcraft*, US Army Aviation and Missile Command.

References (2)

Helicopter attitude control design/Rotor state feedback

- M.D. Takahashi (1994), *Rotor-state feedback in the design of flight control laws for a hovering helicopter*, Journal of the American Helicopter Society 39(1), 50-62.
- S. Panza and M. Lovera (2014), *Rotor state feedback in helicopter flight control: robustness and fault tolerance*, in IEEE Multi-Conference on Systems and Control, Antibes-Nice, France.
- S. Panza and M. Lovera (2015) *Rotor state feedback in the design of rotorcraft attitude control laws,* in 3rd CEAS Specialist Conference on Guidance, Navigation and Control, Toulouse, France. (also available as book chapter)
- S. Panza, M. Bergamasco, L. Viganò and M. Lovera (2015) *Rotor state feedback in rotorcraft attitude control,* in 41st European Rotorcraft Forum ERF 2015, Munich, Germany.

Tilt-rotor attitude control design

- S. Panza, L. Guastalla, B. Roda and M. Lovera. Tilt-rotor multivariable attitude control with rotor state feedback. In 20th IFAC Symposium on Automatic Control in Aerospace, Sherbrooke, Quebec, Canada, 2016